INSTALLATION AND SERVICING

SOLAR THERMAL

For users guide see reverse of book

When replacing any part on this appliance, use only spare parts that you can be assured conform to the safety and performance specification that we require.
Do not use reconditioned or copy parts that have not been clearly authorised by Ideal.

For the very latest copy of literature for specification and maintenance practices visit our website www.idealheating.com where you can download the relevant information in PDF format.

February 2012
UIN 207786 A02

GENERAL

TABLE 1 - GENERAL DATA - SOLAR COLLECTOR SPECIFICATION

Model		TS 8000	TS 8001
Size	Collector type	Roof-mounted collector	In Roof-mounted collector
	Overall area (m2)	2.02	2.51
	Absorber area (m2)	1.84	2.28
	Aperture area (m2)	1.91	2.32
	L x W x H (mm)	1730 x 1170 x 83	2058 x 1227 x 105
	Weight (kg)	35	49
Performance and Installation	Absorber capacity (l)	1.4	1.7
	Housing	Al-frame	Wooden frame
	Surface	Al, natural or anodized (Improved corrosion resistance)	
	Back plate	Al-sheet	
	Absorber sheet	Al highly selectively coated	Al, highly selective vacuum coating
	Absorption* (%)	95	95
	Emission* (%)	5	5
	ø manifold (mm)	18 or 22 (¾ or 1")	22 (1")
	ø risers (mm)	8	8
	Connections	Blank (compression joint), coupling nut with flat seal	Coupling nut with flat seal
	Glass	3.2 mm tempered solar safety glass	3.2 mm tempered solar safety glass
	Transmittance of glass (%)	95	90.2
	Insulation	40 mm mineral wool plate	50 mm mineral wool plate
	Max. stagnation temperature	234˚C under test conditions	234˚C under test conditions
	Max. operating pressure	10 bar	10 bar
	Aperture area	1.922m²	2.33m²
	Conversion factor N_0	0.769	0.776
	Heat loss coefficient a_1	3.847W/m²K	3.293W/m²K
	Proper heat transfer medium	Polypropylene glycol/water mixture	Polypropylene glycol/water mixture
	Approved installation angle min.	15˚, max. 75˚	15˚, max. 75˚
	Certificate	EN 1 2975-1.2 SOLAR KEYMARK	

Sap Data

TS8000 - On Roof
Aperture area 1.922m²
Conversion Factor N_o 0.769
Heat Loss coefficient a_1 3.847W/m²K
Heat Loss coefficient a_2 0.0103W/m²K

TS8001 - In Roof
Aperture Area 2.33m²
Conversion Factor N_o 0.776
Heat loss Coefficient a_1 3.293W/m²K
Heat loss Coefficient a_2 0.011W/m²K

TABLE 2 - GENERAL DATA - SOLAR PUMP STATION SPECIFICATION

Max. working excess pressure	6 bar
Max. working temperature	120°C
Safety valve	6 bar
Circulation pump	Wilo ST25/7-ECO-3P
Nominal voltage	AC 230 V
Power consumption Pump speed 1	39 W
Pump speed 2	47 W
Pump speed 3	53 W
Max. pump head	7 m
Max. pump capacity	4.5 m³/hr
Flow measuring device	2 – 12 l/min

TABLE 3 - GENERAL DATA - SOLAR CONTROLLER SPECIFICATION

Operating voltage	230 Volt (± 15%) 50Hz
Internal consumption	≤ 1W
3 inputs for recording temperatures	PT1000
1 output	Normally open relay, switching power max.800W, fuse:250V 4A MT
Output protected against overload and short circuits	
Display	Animated LCD display, 2 colour backlight
Appropriate protection	IP 20/DIN 40050
Operation temperature range	0 to + 45°C
Installation	Wall mounting
Weight	250 g
Housing	Recyclable, 3 part plastic housing
Dimensions	L x B x H (mm) 136 x 133 x 37
2 x PT1000	1.5m silicon cable, measuring range up to+ 180 °C

SOLAR THERMAL

Destination Country: GB, IE

TS8000 (on roof)

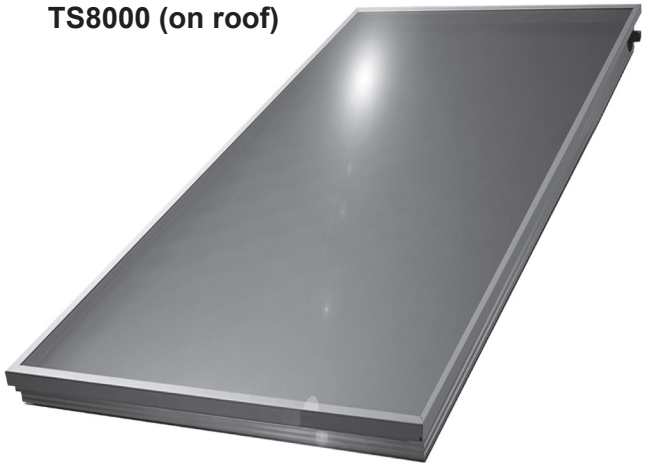

TS8001 (in roof)

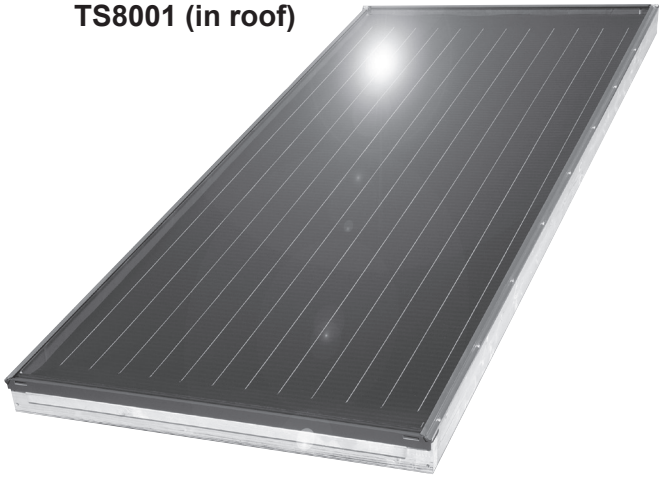

CONTENTS

GENERAL

INTRODUCTION

Ideal Solar is a range of solar water heating equipment for use with twin coil storage cylinders only. The solar collectors come as flat plate type or evacuated tube and are suitable for use in new and refurbishment installations.

A range of packs are available providing all equipment (except cylinders, pipework and insulation) for a range of properties. The pack includes solar collector(s), mounting brackets, controller, pump station, expansion vessel and system fluid.

The solar collector is copper tube ultrasonically welded to selectively coated absorber plates. This is housed in a sealed casing with mineral wool insulation to rear and sides. It is sealed into the casing with EPDM seals and a robust tempered glass cover. Mounting kits are available to suit tiles, slates both on or inset to roofs. In addition flat roof mounting is provided.

THE IDEAL SOLAR SYSTEM PACKAGE COMPRISES OF:

1. **Ideal Solar Collector(s)**

   The TS800 solar collector panel(s) can be mounted directly onto sloping roofs with a variety of fixings for different roof coverings or onto a support frame for flat roofs.

   The TS8001 is for inset applications only.

   The Ideal Solar kit comprises of one, two or three high performance flat solar panel collectors.

   Pressure loss (bends, valves, etc.)should be recognised when specifying the pump arrangement.

2. **Ideal Solar Twin Line Pump Station**

   The solar pump station is supplied with integrated pump to provide circulation of the heat transfer fluid, the main components of the unit are:

   A circulation pump.

   A flow limiter with fill & drain valve shut-off valve.

   Two ball valves with integral display thermometers and check valves.

   Safety relief valve/pressure gauge assembly.

   Non-flow valve fitted in both the flow and return circuit to prevent the possibility of gravity circulation in the solar circuit.

3. **Ideal Solar Controller EC1**

   The controller allows quick setting of functions and features with LCD display to provide graphical information.

   The controller allows the user to select the temperature required at the hot water cylinder. The controller then automatically determines when to run the pump to bring the energy from the solar collector panel(s) to the cylinder.

   The control uses a simple temperature difference to define when the pump runs. This ensures that the pump is running only when the benefit from the solar collectors is available.

OPERATION

The solar collector panel is mounted on a surface which is selected for its exposure to sunlight and connected via pipe work, to the lower coil of a twin-coil solar cylinder.

The solar controller monitors the temperature of the solar collectors and the cylinder via its sensors.

The energy in the sun's rays is absorbed by the solar collector's selective coated plate's which is then transferred to the heat transfer fluid contained within the collector system pipe work. When the solar collector sensor temperature is elevated 4°C above the cylinder sensor temperature the controller activates the circulating pump.

The pipe work is filled with a ready-mixed heat transfer fluid containing glycol and water, which is circulated by a pump to the solar coil in the hot water cylinder. The heat is deposited in the storage cylinder and the heat transfer fluid returns to the collector to absorb more free solar energy.

The circulation pump will continue to operate until the cylinder sensor is satisfied (factory set 60˚C) or the differential temperature between the solar collector sensor and the cylinder sensor reduces to 2˚C.

With current recommendations to store water at 60°C it is becoming more of a consideration to protect persons of reduced physical, sensory or mental capabilities from scalding. A suitable method to achieve this would be to fit a Thermostatic Mixing Valve (TMV) to the hot water outlet from the cylinder. If the TMV is not fitted with a line strainer, they must be fitted on the hot and cold supply lines.

IMPORTANT

Plastic Pipework is not suitable for the temperatures possible in Solar circuits.

All connections and joints must be resistant to glycol and be resistant to temperatures of up to 200°C.

OPTIONAL EXTRA KITS

- Flat Roof Frame Kit (1 and 2 collectors)
- Roof Fixing Kit (slates)
- Heat Transfer Fluid (10, 25 & 25 lt containers)
- Additional on roof and in roof flat panel collectors
- Vacuum tube collectors
- Single line pump station
- First fix kit - on roof
- First fix kit - in roof
- Solar controller EC2 (controls East/West solar collector orientation)
- Roof Inset Kit (1, 2, 3 and additional collectors) for tile roofs
- Roof Inset Kit (1, 2, 3 and additional collectors) for slate roofs

UNVENTED DHW CYLINDERS

When connecting the Ideal Solar System to an un-vented hot water storage cylinder, it is recommended that the electrical supply to the solar control system is taken via the thermal cut-out device on the cylinder.

CYLINDERS

For your Ideal Solar System a dual coil hot water storage cylinder must be used. Installation can be for both open vented and sealed systems. If a sealed system is used then part G3 of the Building Regulations must be observed.

When sizing the Dual Coil Hot Water Cylinder a minimum dedicated solar volume must be either 25 litres per sq metre of panel or 80% of the daily hot water used.

For reasonable efficiency 35 litres per sq metre of panel should be used.

For best practice a figure of 50 litres per square metre of panel should be used. (These details are contained within the Domestic Heating Compliance Guide).

STANDARDS AND SAFETY INSTRUCTIONS

OVERVIEW OF EU STANDARDS

Solar Systems in General

EN ISO 9488
Thermal solar systems and components, terminology (ISO/DIS 9488; 1995)

EN 12975-1
Thermal solar systems and components - Collectors - Part 1: General requirements

EN 12975-2
Thermal solar systems and components - Collectors - Part 2: Test Methods

ENV 1991-2-3
Eurocode 1 - Basis of design and actions on structures - Part 2-3: Actions on structures - Snow Loads

EN 12976-1
Thermal solar systems and components - Factory made systems - Part 1: General requirements

EN 12976-2
Thermal solar systems and components - Factory made systems - Part 2: Testing Methods

ENV 12977-1
Thermal solar systems and components - Custom built systems - Part 1: General requirements

ENV 12977-2
Thermal solar systems and components - Factory made systems - Part 2: Testing Methods

ISO 9459-1: 1993
Solar heating - Domestic Water heating systems - Part 1: Performance rating procedure using indoor test methods

ISO/TR 10217
Solar energy - Water heating systems - Guide to material selection with regard to internal corrosion

Collectors and Collector Assembly

ENV 1991-2-4
Eurocode 1 - Basics of design and actions on structures - Part 2-4: Actions on structures - Wind actions

Lightning Protection

ENV 61024-1
Protection of structures against lightning – Part 1: General principles (IEC 1024-1: 1990; modified)
Building Regulation, dating from 1991 (England and Wales) Requirement G3, L1 and Regulation 7

BS 7671
Requirements for electrical installations (IEE Wiring Regulations, 16th edition

SAFE HANDLING OF SUBSTANCES

Heat Transfer Fluid
Use undiluted only.
Keep out of reach of children.
Avoid contact with skin and eyes.
If swallowed, seek medical advice immediately and show the label adhered to the container.

Disposal
Any packaging contaminated or not along with Ideal Solar fluid must be disposed of at an appropriate waste site, whilst observing local regulations.

PLANNING PERMISSION

Planning permission for the Ideal Solar System is generally only required if you are in a conservation area or you are installing a solar system on a listed building.

However it is prudent to seek the opinion of the local authority on planning matters prior to starting work on the solar installation.

INSTALLATION REQUIREMENTS

The installation of the Ideal solar system must be carried out in accordance with the relevant requirements for safety, current Wiring Regulations, local Building Regulations, Building Standards (Scotland), (Consolidation) Regulations and Bylaws of the local water company and Health and Safety document No. 63S (Electricity at Work Regulations 1989).

It should be in accordance with the relevant recommendations of the following British Standards and Regulations:

- BS 5918:1989
- The Health and Safety at Work Act 1974
- The Management of Health and Safety at Work Regulations 1999
- The Construction (Health, Safety and Welfare) Regulations 1996
- The Construction (Design and Management) Regulations 1994
- The Lifting Operations and Lifting Equipment Regulations 1998

The manufacturer's notes must not be taken in any way as overriding statutory regulations.

ELECTRICITY SUPPLY

All wiring must be performed in accordance with BS7671: Requirements for Electrical Installations (IEE Wiring Regulations, 16th Edition).

A 3 amp fused three pin plug and un-switched shuttered socket outlet (both complying with BS 1363) or preferably a double pole isolator with a contact separation of 3mm in all poles supplying the controller should be used. The controller must be earthed.

Earth Bonding

Ensure that the primary flow and return circuit is electrically cross-bonded in accordance with BS 7676.

WARRANTY

The Ideal Solar system is supplied with a Comprehensive Warranty cover of 10 years for the solar collector(s) and 2 years for the pump station and controller.

For one off installers - products are sold with materials only warranty

For Developers - Materials only warrantly. If labour required, to be arranged and priced with the installer.

Ideal Solar Technical Support Line: 01482 498307.

HEAT TRANSFER FLUID

Solar panel collectors and system components should be used only with the recommended heat transfer fluid as supplied in the kit.

Recommended fluid is supplied as:

10 Lt Container - Part No. UIN 206536
20 Lt Container - Part No. UIN 206537
25 Lt Container - Part No. UIN 206538

The heat transfer fluid uses a proven concentration of anti-freeze and water to give protection against freezing and provide optimum performance from the solar panel collectors and system components. Additional fluid can be obtained via Ideal Solar stockists.

The fluid is pre-mixed to 60% concentration and is suitable for flat plate and vacuum tube collectors.

INSULATION

Exposed pipe work should be insulated according to the high temperatures that the collectors are able to generate. This should be high temperature Armalfex or similar grade.

Suitable insulation is available from Armacell UK Ltd., Mars Street, Oldham, Lancashire OL9 6LY.

1A INDIRECT PRESSURISED SOLAR CIRCUIT

The Ideal Solar System features high performance solar panel collectors with highly advanced features. The collector has been awarded the Solar Keymark, the EUs quality mark for solar collectors. The collectors are mounted on a fast-to-fit frame and a solar pump station is also supplied to provide all the safety features required for a pressurised circuit. The Ideal Solar Controller EC1 ensures efficient use of the available solar energy at any given time and features several extra functions.

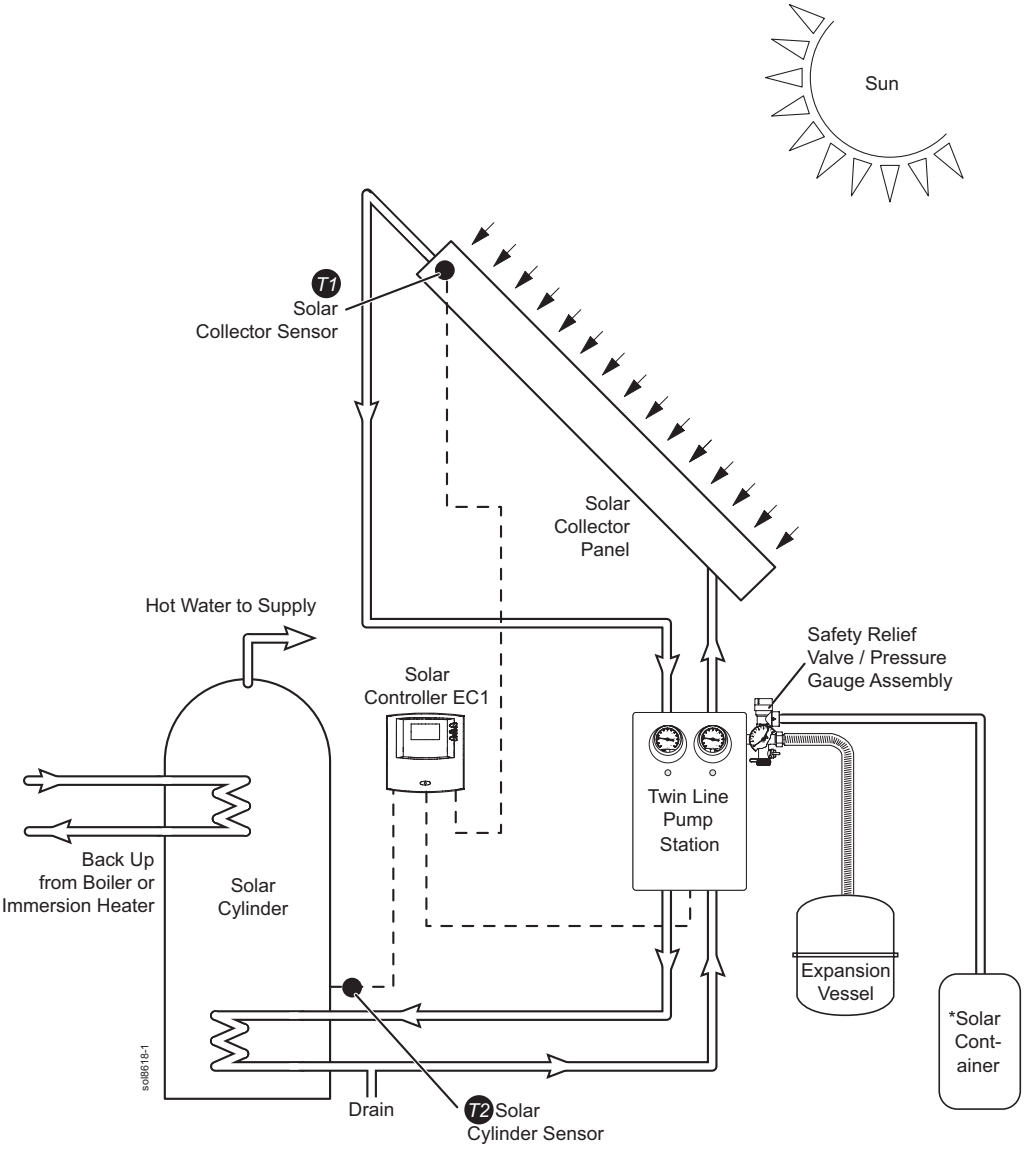

***Important**: solar fluid container should be manufactured from a material capable of withstanding the high temperatures at which solar fluid operates.

1B EAST WEST SOLAR PANEL CIRCUIT

Solar panels can be located in an East - West orientation. In this configuration single line pump station (Ideal part No. UIN 207072) in addition to the twin line pump station should be employed. Control between the panels located in different orientations can be achieved by specifying the solar controller EC2, (Ideal Part No. UIN 207754), which has the capability to control panels located in East - West configuration. Controller, installation and operating instructions are provided with the Solar controller EC2 kit.

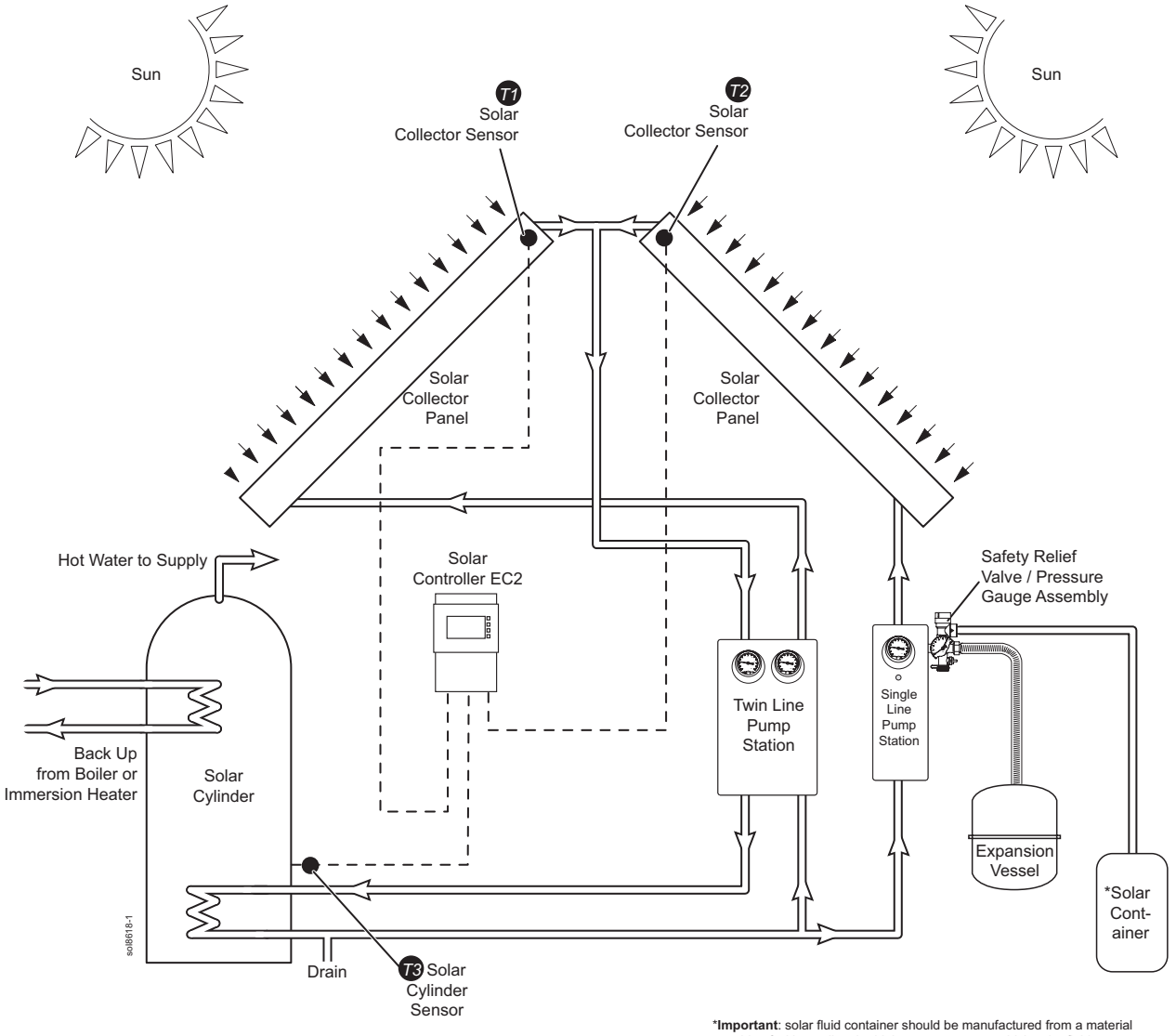

***Important**: solar fluid container should be manufactured from a material capable of withstanding the high temperatures at which solar fluid operates.

2 SOLAR PACK CONTENTS

Before starting any work check the solar pack contents. Please note, dependent upon specific solar pack, ordered contents may vary.

ON ROOF SOLAR PACK

1. On roof solar collector(s)
2. Twin line pump station with expansion vessel installation hardware
3. Solar controller EC1
4. Solar expansion vessel
5. Solar fluid
6. First fix connection pack containing angle through roof flexi hoses, panel angle couplings and solar controller flow sensor.
7. Basic on roof collector ;mounting set - see frame seven for detail
8. collector support rails - see frame seven for details.

IN ROOF SOLAR PACK

1. In roof solar collector(s)
2. Twin line pump station with expansion vessel installation hardware
3. Solar controller EC1
4. Solar expansion vessel
5. Solar fluid
6. First fix connection pack containing angle through roof flexi hoses, panel angle couplings and solar controller flow sensor.
7. Basic on roof collector ;mounting set - see frame seven for detail
8. Wooden wedges for collectors flashing - see Frame 16 for detail.
9. In roof flashing set - see Frame 16 for detail.

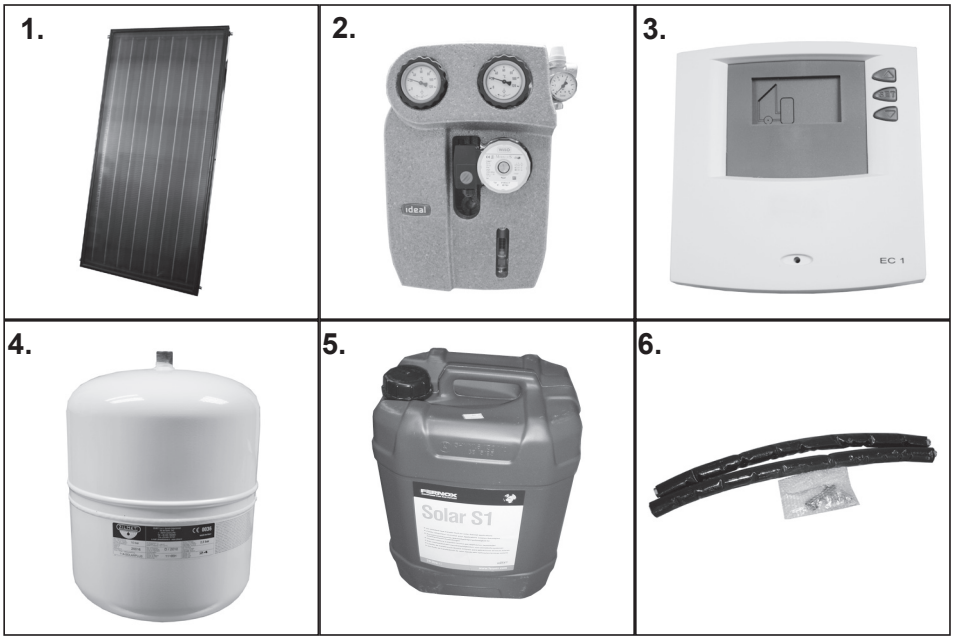

PARTS NOT INCLUDED IN THE SOLAR PACK

You will have to provide all pipework, fittings and insulation. The following specifications are required for items provided by the installer:

Pipework: This should be 15 mm or 22mm copper or flexible stainless on both flow and return, depending on number of solar collectors and pipework (see Frame 4). Plastic pipework is not suitable for the temperature extremes possible in solar circuits. Pipe clips must withstand the temperatures of up to 200°C. (We recomend annular twin pipes PART No's. 206519 - DN16x15m long & 206520 - DN20x15m long). A first fix kit is provided with each solar pack. This comprises flexible through roof hoses (insulated) one metre in length, collector panel angle couplings with fibre seals and a separate solar controller flow sensor.

Fittings: Brass olive compression fittings must be used . Unleaded solder is not designed for solar circuits. Alternatively, high performance crimped fittings or similar performance fittings can be used. Teflon or similar type tape is not to be used although a proprietary liquid type suitable for solar conditions may be used. Any drain valves etc. must be capable of handling the temperatures indicated above. Any fittings and pipework must be capable of withstanding 1.5 times the safety valve pressure.

Insulation: This should be High Temperature Armaflex or similar grade insulation or above. Class O Armaflex is not UV-resistant or designed for the temperatures realised in the solar primary circuit. Polythene insulation will melt on a solar primary circuit. All external items such as cable clips to hold the collector sensor must be UV-resistant.

Flexible stainless steel hose is available in pre-insulated form using suitable high temperature UV-resistant insulation and a suitable two-core cable for the solar collector sensor. This hose is specifically designed for solar applications.

3 COLLECTOR SIZING AND LOCATION

Typically, approximately 1 square meter of solar collector should be supplied for each house occupant. Each Ideal Solar Collector panel has an external area of 2.02m^2 (TS8000) and 2.51 m^2 (TS8001). Therefore, the Ideal 2 collector array is ideal for a 3 to 4 person household and the Ideal 3 collector array for a 5 to 6 person household. The collector array should be located between 30° East and 40° West of South and at an inclination between 20° to 45° within these bands there is no more than a 10% loss in efficiency from the optimum south facing at an inclination of 35°. For an East-West roof, either an East-West application can be installed with a collector on each pitch or additional collector(s) can be fitted on either the East-West roof. For example, a 3 collector array on an East facing roof would be ideal for 4 to 5 occupants where there is a 20 % loss in performance as compared to the ideal South facing 30° pitch. There should be no significant over-shading of buildings, trees or other obstructions. Even obstructions to the north of the collector can block a significant proportion of the diffuse solar radiation. Significant overshading can be compensated by over-sizing the solar system.

4 INSTALLATION OF THE COLLECTOR AND EXTERNAL COMPONENTS

The flow and return pipework can be passed through the roof either with a proprietary roof penetration tile or a Code 4 lead custom made roof penetration tile. Ventilation tiles can sometimes be adapted for this purpose. Alternatively a silicon “dektite” can be used. Optional lead pipe flashing tile kits which can be adapted to suit most roof tiles are available. Any exposed elements of the roof penetration must be carefully sealed with exterior grade low modulus silicone.

Number of Solar Collectors	Single Pipe Length			
	Up to 6m	Up to 15m	up to 20m	up to 25m
to 5	Ø 15mm (DN12)		Ø 22 mm (DN 15)	Ø 22 mm (DN 20)
to 9	Ø 22 mm (DN15)	Ø 22 mm (DN20)	Ø 28 mm (DN25)	Ø 28 mm (DN25)

IMPORTANT

All connections and joints must be resistant to temperature of up to 200°C and resistant to glycol.

During installation and servicing means for covering the solar collectors will be required to avoid burns. In direct sunlight, the solar collectors can reach temperatures of 200°C.

Note. It is recommended that you select the pipework in accordance with this table. If the system provides additional pressure loss (bends, valves, etc.), you should consider selecting pipe with larger diameter.

The final part of the roof installation is the insertion of the silicon PT1000 Collector Sensor into its mounting pocket in the Flow Connector and feeding of the cable through or under the flow roof penetration and through the felt or timber sarking so that the sensor cable is visible in the loft space.

Wiring run lengths and cross sectional areas for low voltage collector sensor wire:

Lengths up to 50m: 0.75mm^2 **Lengths up to 100m: 1.5mm^2**

5 ASSEMBLY INSTRUCTIONS

General and Transport Instructions

The mounting system is suitable for tiled roofs only. Installation must only be carried out by qualified personnel. The entire information in these instructions is intended exclusively for such qualified personnel. Only the supplied material should be used for the installation. Prior to starting installation and operation of the solar collector system, please inform yourself about the applicable local standards and regulations. The use of a carrying strap is recommended for transporting the collector. The collector must not be lifted at the connections or on the threading. Avoid impacts and mechanical influences on the collector, in particular on the solar glass, the rear panel and pipe connections.

Statics - tiled roofs

The collectors may only be mounted on sufficiently load-bearing roof surfaces and substructures. It is imperative that the static load bearing capacity of the roof or substructure is checked in terms of local and regional conditions prior to installation of the collectors by the customer, if necessary through the involvement of a structural engineer. Particular attention should be paid to the quality of the (timber) substructure in terms of the stability of the screw connections necessary for fastening the collectors. The checking of the entire collector structure by the customer as per DIN 1055 part 4 and 5 or as per the applicable country-specific regulations is particularly important in areas with heavy snowfall (note: 1 m³ powder snow ~ 60 kg / 1 m³ wet snow ~ 200 kg) or in areas exposed to high wind speeds. The assessment should also take into account any particular circumstances at the place of installation (foehn wind, air jets or eddy formation etc.) which can lead to increased loads. When selecting the installation site it should be ensured that the maximum load is not exceeded either by snow or wind forces. As a rule, collector arrays must be installed such that any possible collection of snow is prevented from reaching the collectors by snow barriers (or through special forms of installation). The distance to roof ridges/edges must be at least 1 m.

Note: Installing a collector array signifies an intervention into an (existing) roof. Roof coverings, e.g. tiles, shingle and slate, especially in the case of converted and inhabited loft spaces or roofs with less than the minimum slope (with regards to the covering) require additional measures by the customer, e.g. sarking membranes, as security against water penetration caused by wind pressure and driving snow.

Lightning protection / Equipotential bonding of the building

In accordance with the lightning protection standard ÖVE/ÖNORM EN 62305 Part 1-4 the collector array cannot be connected to the building's lightning protection. A safety distance of at least 1 m must be maintained from any possible adjacent conducting object. For installations on metal substructures at the installation site, generally qualified electricians must be consulted. To carry out a building potential equalisation, the metal tubes of the solar circuit and all collector cases or fastenings must be connected to the main potential equalisation bus by a qualified electrician in accordance with ÖVE/ÖNORM E 8001-1 or the country-specific standards.

Connections

Depending on the design, the collectors must be connected with one another and/or the connection pipes using screw fittings (1" internal/external thread) with flat-face sealing. Ensure correct placement of the flat gaskets. If flexible pipes are not used as connectors, precautions must be taken to protect the connection pipes against temperature fluctuations caused by heat expansion, e.g. expansion bends and flexible piping (see Connecting the collectors to one another/Operational recommendations). Larger collector arrays must be assembled with expansion bends or flexible members inserted in the links. (IMPORTANT: check the pump design). When tightening the union nuts, always balance (counter) the torque with a pipe wrench or another spanner to prevent damage to the absorber.

Collector inclination / General notes

The collector is suitable for angles between 20° (minimum) and 65° (maximum). The collector must be installed so that rear ventilation for preventing the diffusion of moisture in the collector is guaranteed. The collector connections and the ventilation openings must be protected against the penetration of water as well as contamination such as dust etc.

Cleaning

Clean the water courses of the sheet metal edging at least once per year (or more often if required).

Legal guarantee

Legal guarantee claims can only be made if the supplier's own antifreeze has been used and maintenance has been carried out correctly. Installation by qualified personnel with absolute adherence to the instructions is a prerequisite for the justification of claims.

6 SUGGESTION FOR ATTACHMENT POINTS

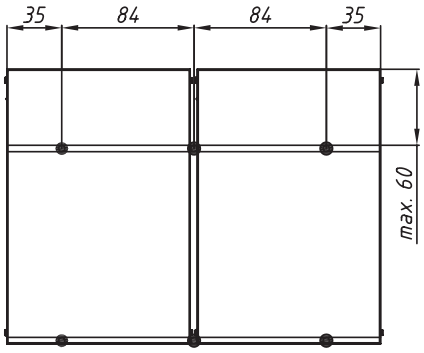

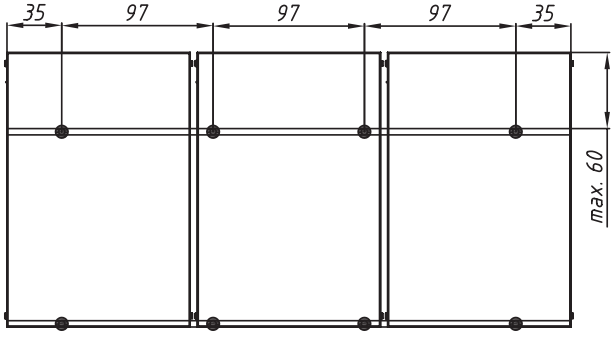

Collector Vertical		
Collectors	**Total length**	**Atachment points**
2	239cm	6
3	361cm	8
4	482cm	10
5	603cm	12
6	724cm	14

Additional mounting structures must be provided in areas with high snow and wind loads!
(Observe DIN 1055 or country-specific regulations)

•.....Atachment points

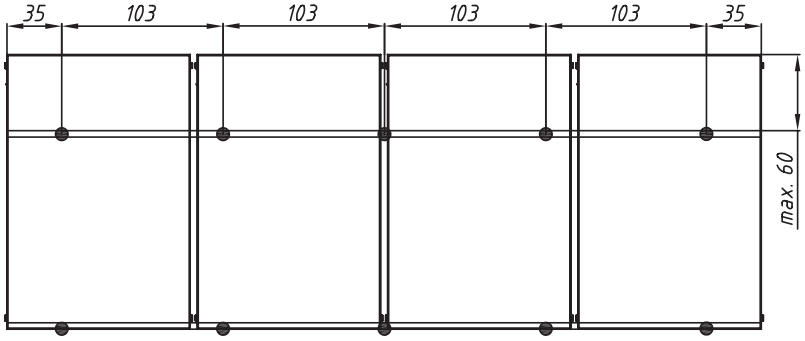

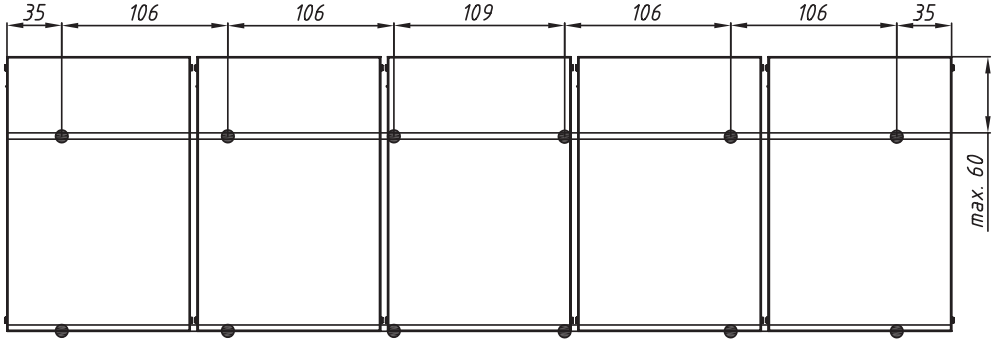

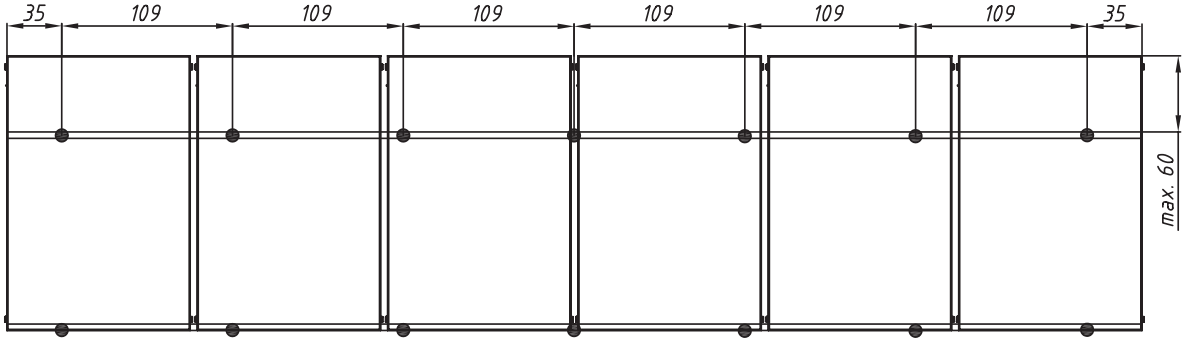

7 OVERVIEW OF MATERIALS - ON ROOF

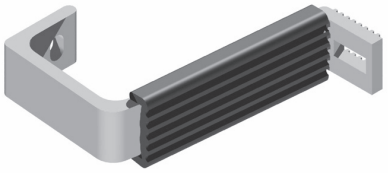

Roof bracket

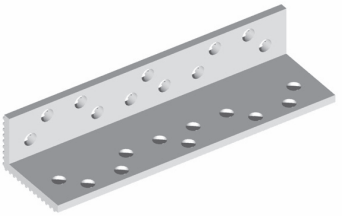

Roof bracket console

Self-tapping screws 6*60

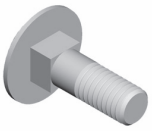

Cup square bolt 8*25

M8 hex self-securing nut

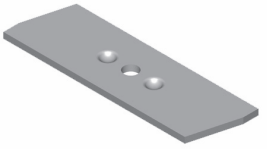

Clamping piece

Clamping piece extension

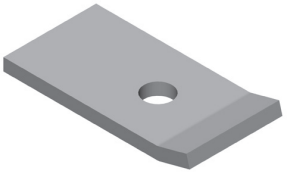

Mounting part, top

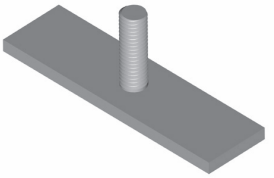

Mounting part extension

M8 washer

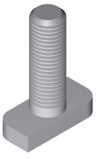

M8*30 hammer-head bolt

M8 hex nut

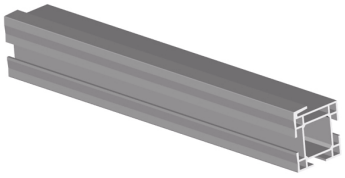

Support rail

Mounting jig

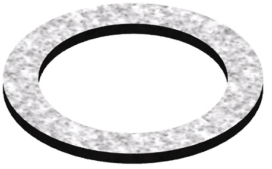

Flat gasket

8 MOUNTING SYSTEM, PARALLEL

General Note:

Points 8-11, 16 and 17 of these instructions only apply when mounting more than two collectors.

1

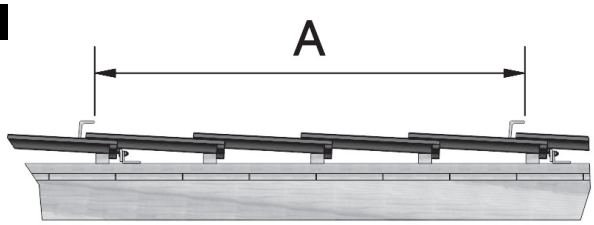

1. Measure distance between mounting bracket. Distance should be between (125 - 155cm). Remove appropriate roof tiles to fit roof bracket console.

2

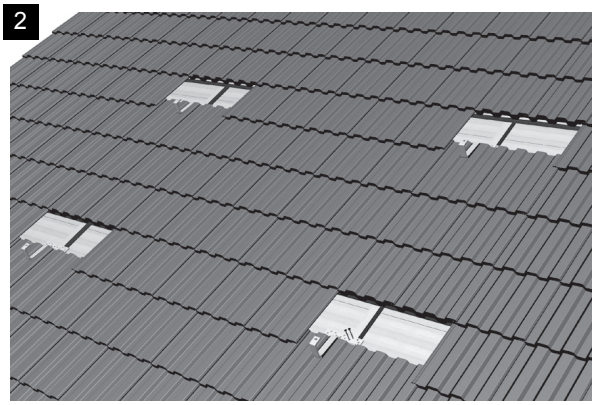

2. A = 125 - 155cm - Distance between brackets

3

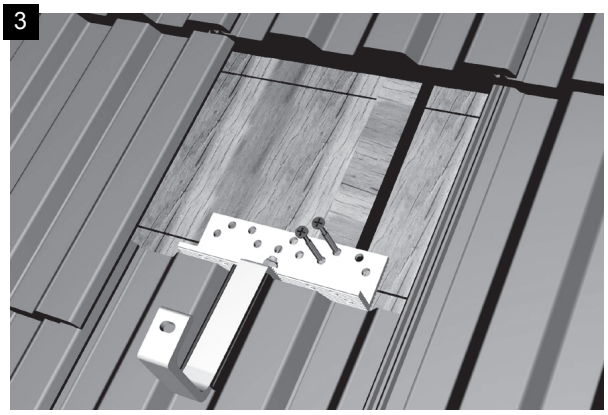

3. Fasten roof bracket console to rafters with provided self tapping screws 6 x 60

4

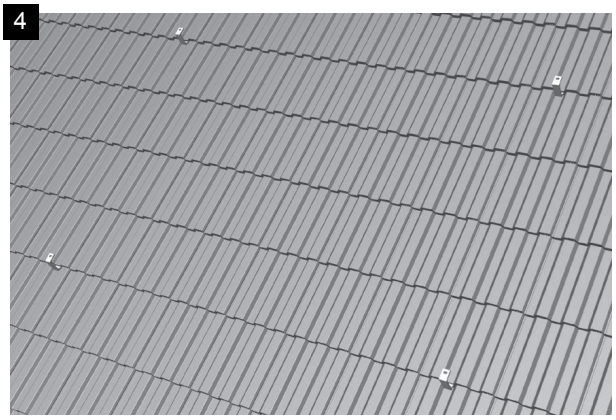

4. Replace roof tile, cut tile to ensure correct fit if necessary.

9 MOUNTING SYSTEM, PARALLEL

5

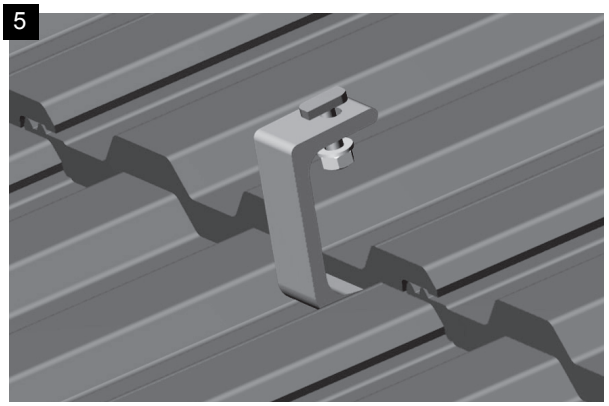

5. Insert the hammer-head bolt into the roof bracket and hand tighten for now

   Order:

   hammer-head bolt - mounting bracket - washer - nut

6a

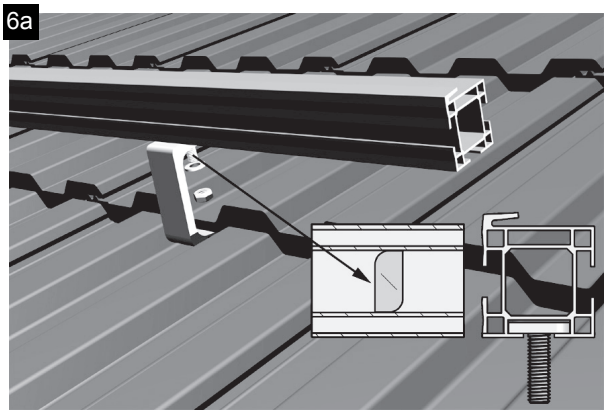

6. Attach lower mounting rails (6a, 6b)

   Order:

   mounting rail - hammer-head bolt - roof bracket - washer - nut

6b

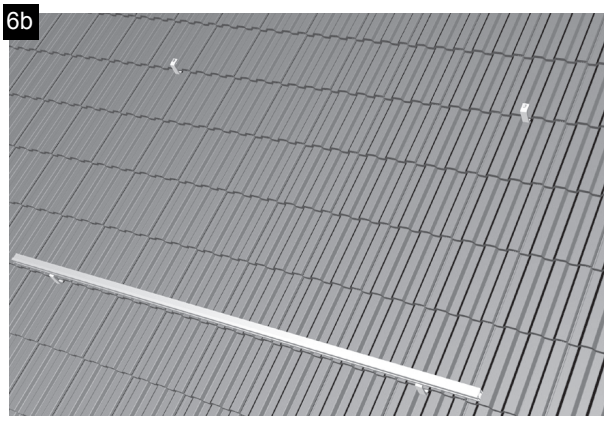

7a

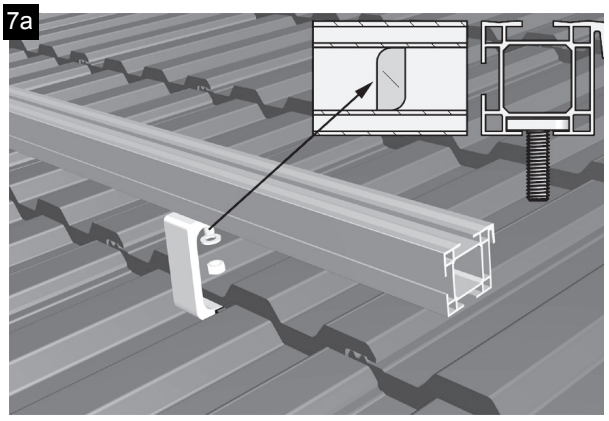

7. Attach upper mounting rail (7a, 7b)

   Order:

   mounting rail - hammer-head bolt - roof bracket - washer - nut

10 MOUNTING SYSTEM, PARALLEL

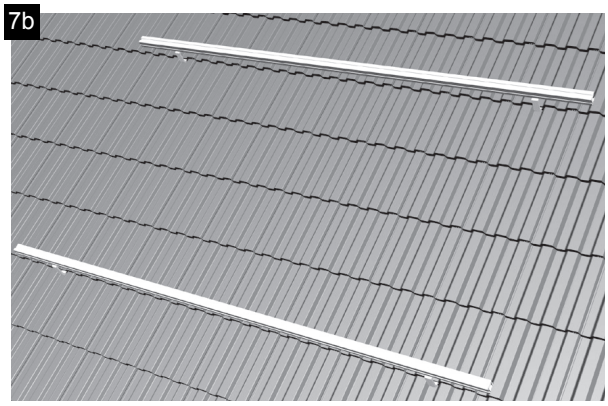

WARNING: *Upper and lower mounting rails must be mounted perfectly straight and parallel to one another!*

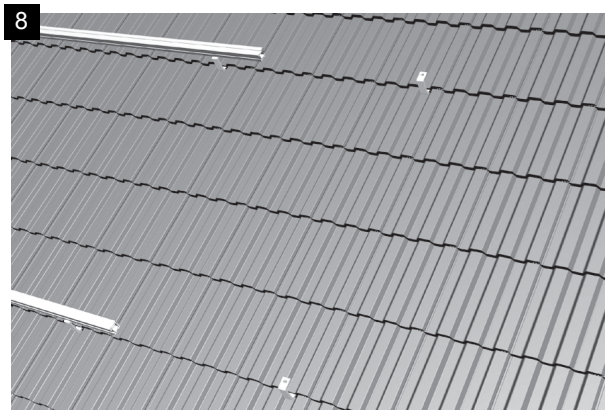

8. Set addition mounting points as described in Points 1-4 if additional collectors are to be fitted.

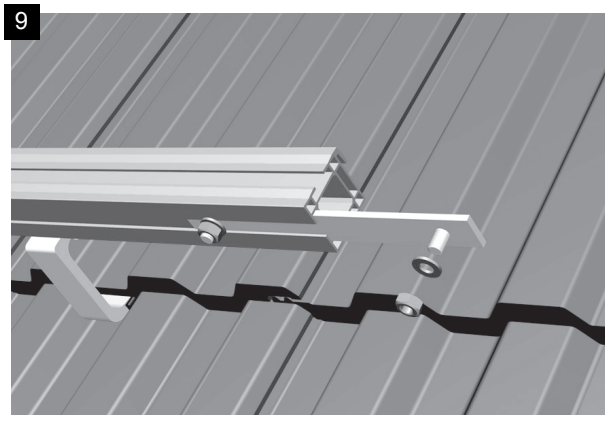

9. Push the clamping piece extension halfway into the inner groove of the mounting rails (upper and lower) and tighten

   Order: mounting rail - clamping piece extension - washer - nut

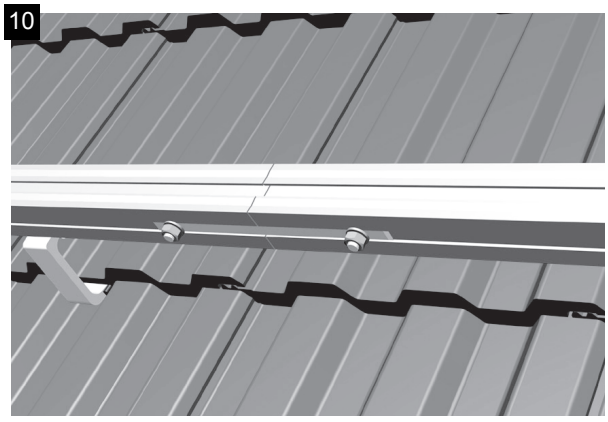

10. insert the following mounting rails (upper and lower) and attach them using the clamping piece extension

    Order: mounting rail - clamping piece extension - washer - nut

11 MOUNTING SYSTEM, PARALLEL

11a

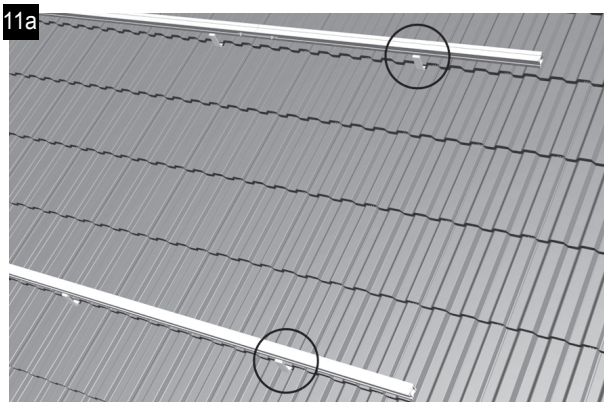

11. Attache the mounting rails (upper and lower) using the roof bracket / clamping piece extension

    Order:

    mounting rail - hammer-head bolt - roof bracket - washer -nut

11b

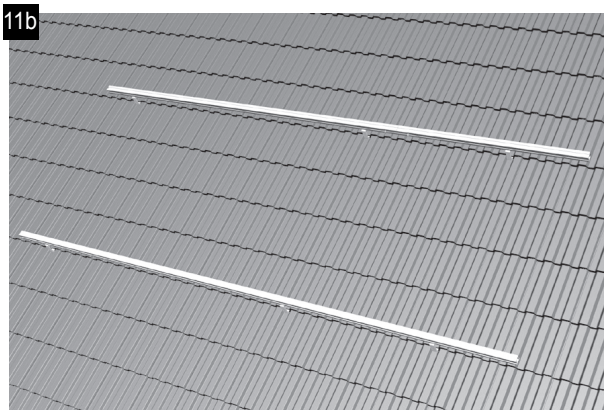

12a

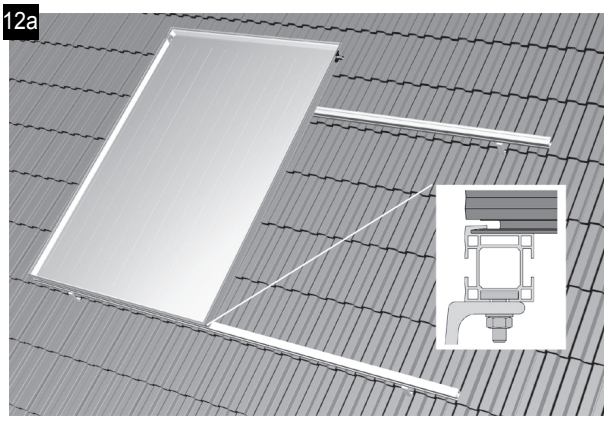

12. Hang the first collector in the lower mounting rail and adjust (12a + 12b)

    ***Note**: Distance between collector and end of moutning rails = 45mm. Measurement A = mesurement B.*

12b

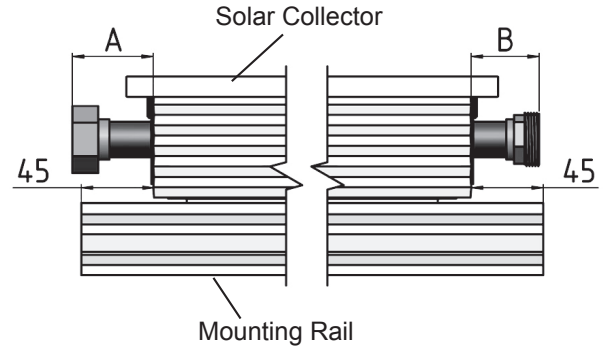

12 MOUNTING SYSTEM, PARALLEL

13

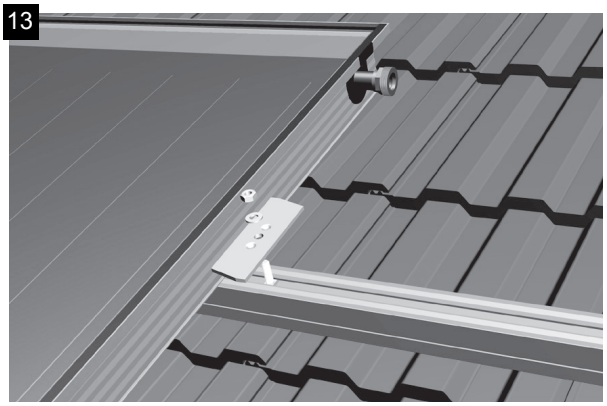

13. Place the clamping piece on the upper mounting rail and hand tighten for now.

    Order: upper mounting rail - hammer-head bolt - washer - clamping piece - washer - nut

14a

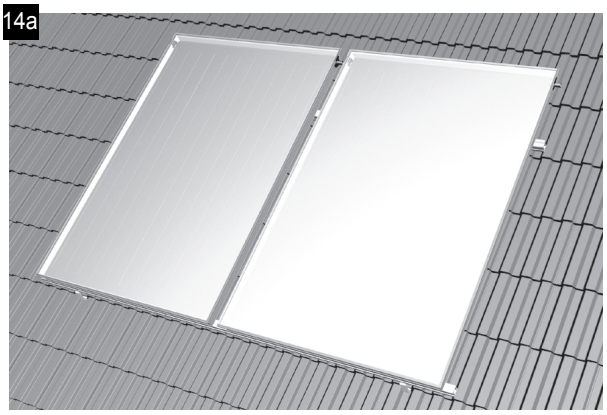

14. Attach the second collector (measurement A = measurement B as shown in Figure 12b)

    Please use the mounting jig (14b)

14b

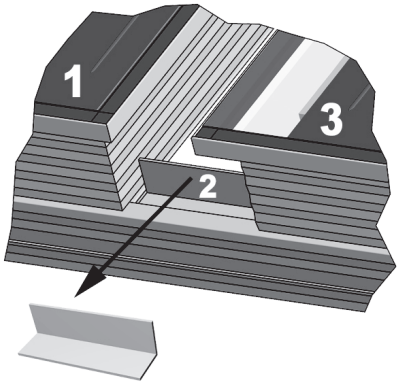

15

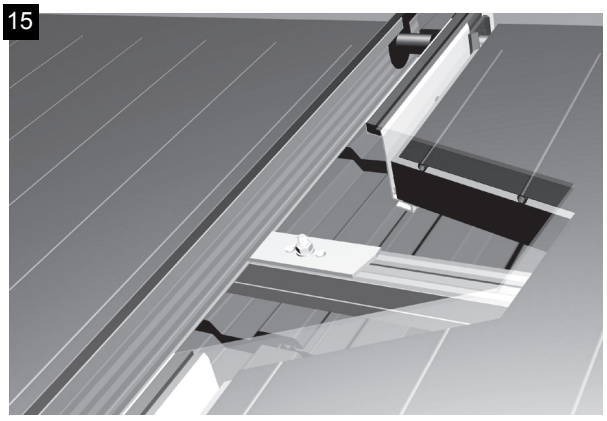

15. Rotate the clamping piece by 90º and screw it tight using a long socket wrench

13 MOUNTING SYSTEM, PARALLEL

16

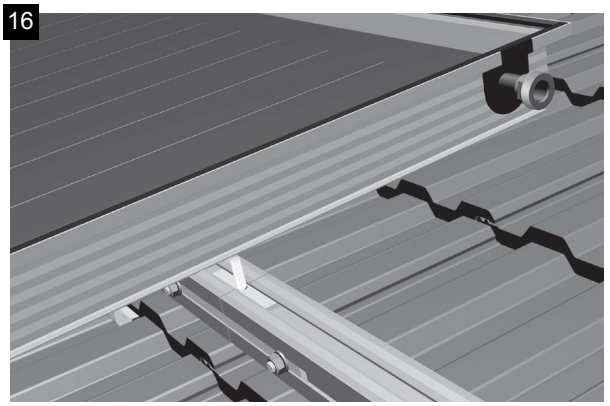

16. With clashing mounting rails, insert and position the mounting part in the upper moutning rail

17

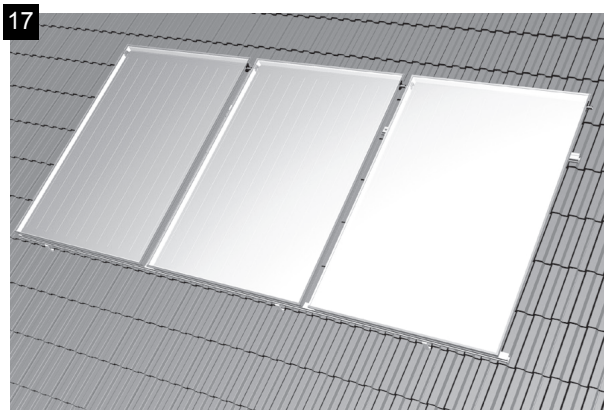

17. Attach additional clamping pieces / collectors as described in Points 12-16.

18

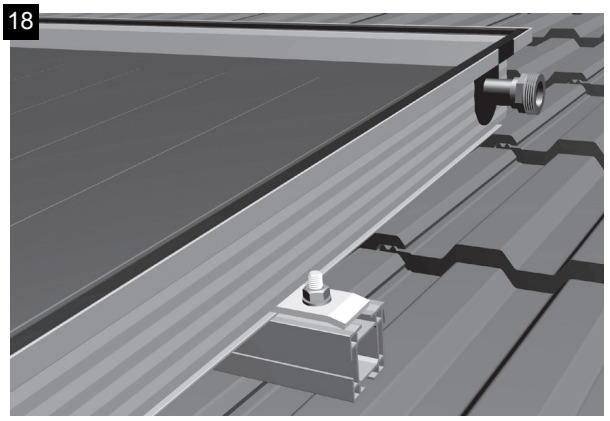

18. Attach the mounting part on the upper left and right end of the collector field

    Order:

    mounting rail - hammer-head bolt - mounting part - washer - nut

19

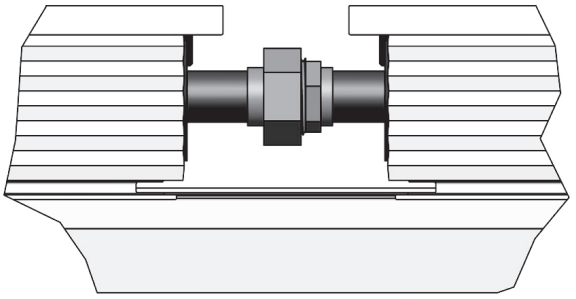

19. Screw the collectors into place.

14 INFORMATION ABOUT THE COLLECTOR (TS 8000)

Technical Data					
Gross area	m^2	2,02	Weight (dry)	kg	35
Net ara	m^2	1,84	Contents	1	1, 4
Aperture	m^2	1,91	Max. Pressure	bar	10

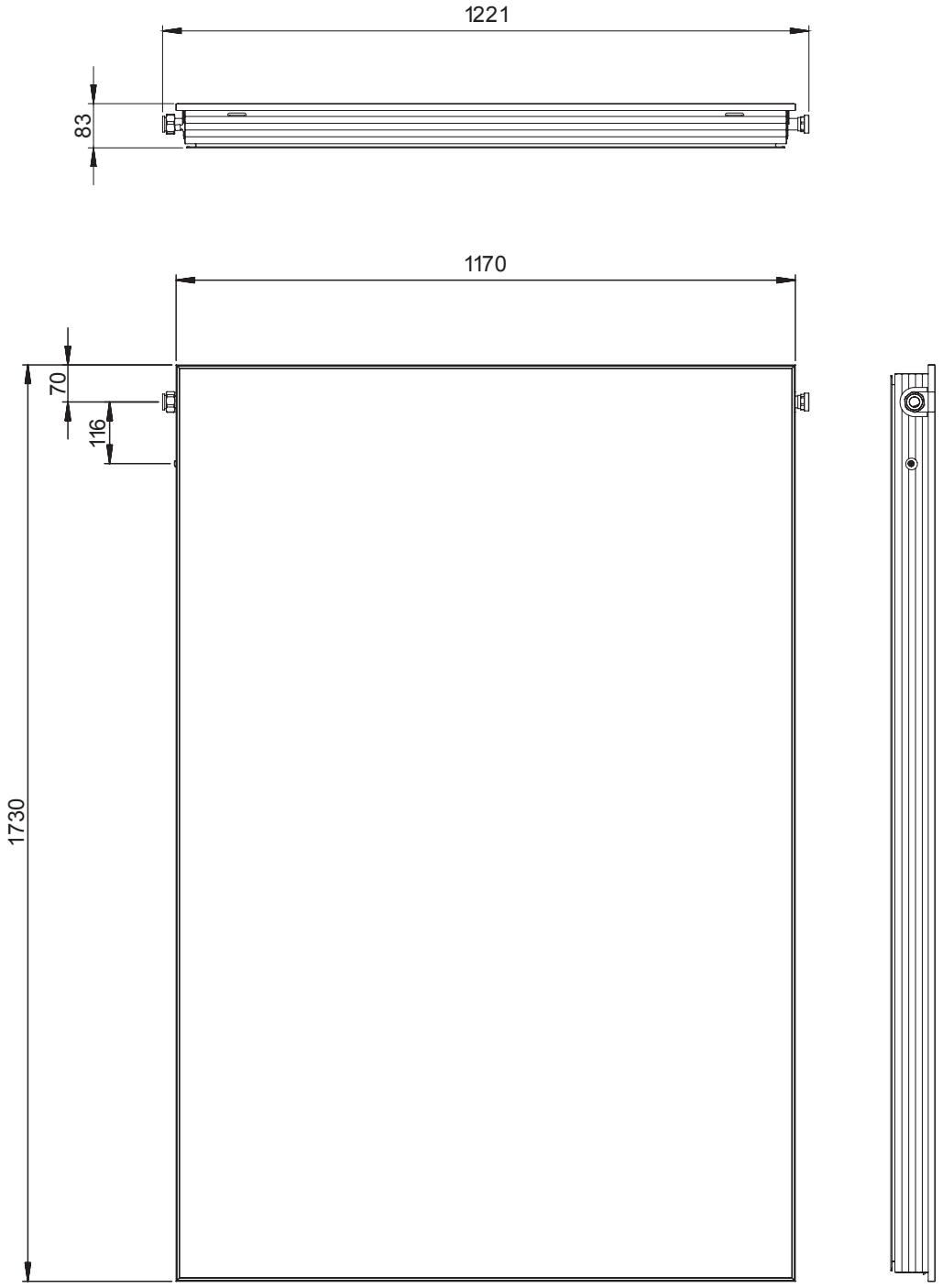

15 OPERATING TIPS - SOLAR POWER SYSTEM (TS 8000)

Connecting the collectors to one another

The diagram below is an example of how the collectors can be connected to one another. However, the actual connection may be different depending on structural conditions. A maximum of 6 collectors may be connected in a series. If a collector panel is made up of more than 6 collectors, the panel must be connected several times in parallel.

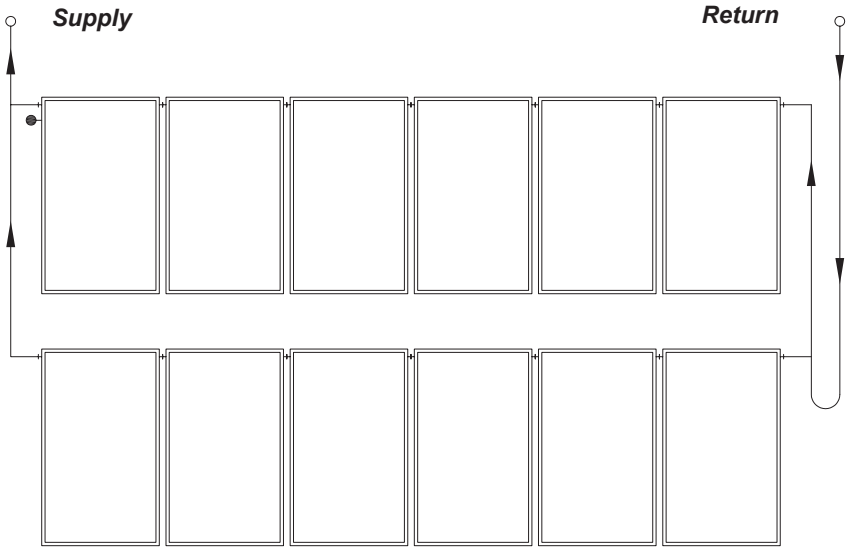

Mass Flow Rate

To ensure the performance of the collector, a specific flow rate of 30 l/m²h is to be selected up to a collector panel size of approx. 25m².

Pipe Diameters

Dimensions table with a specific flow rate of 30 l/m²h

Collector panel size [m²]	approx. 5	approx. 7.5	approx. 12.5	approx. 25
Pipe diameter / copper [mm]	10 - 12	15	18	22
Pipe diameter / stainless steel corrugated pipe	DN16		DN20	

Pressure loss collctor for anti-freeze / water mixture (40% / 60%) at a thermal conducting temperature of 50ºC

Pressure loss curve: $\Delta p = 0{,}000128x^2 + 0{,}022931x$

Mass flow rate [kg/h]	0	50	100	150	200	250	300	350	400	450	500
Pressure loss [mbar]	0	1,5	3,6	6,3	9,7	13,7	18,4	23,7	29,7	36,2	43,5

16 OVERVIEW OF MATERIALS - IN ROOF (TS8001)

Installation batten 30x40x2450

Attachment bracket

Self-trapping screws 5*60 / 5*40

Connecting bend

Flat gasket

Front corner section right/left or middle

Side piece right/left

Side tin cover strip

Sealed plumping screw 4,5*35

Middle cover strip

Sealed plumping screw 3,9*13

Wooden wedge

Self-trapping screws 6*120

Side piece connector right/left

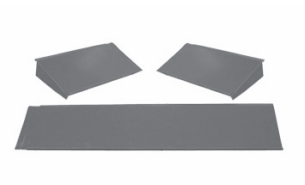

Middle cover right/left or middle

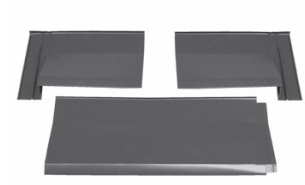

Rear corner section right/left or middle

Self-trapping screws 4*25

Metal retainer, roofing nail

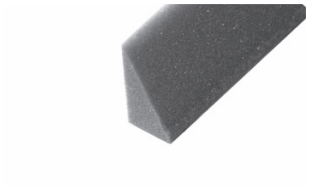

Foam rubber wedge

17 IN ROOF MOUNTING (TS 8001)

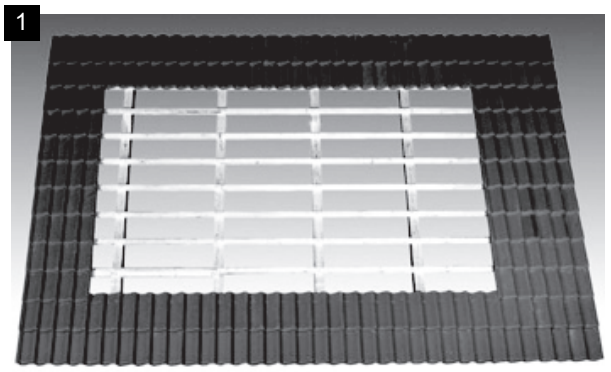

1. Uncover the roof according to the collector surface area

   Width: approx. 1.25m per collector + 1.5m
   Height: approx. 3.0m for single row installation
   Height: approx. 5.0 - 6.0m for double row installation

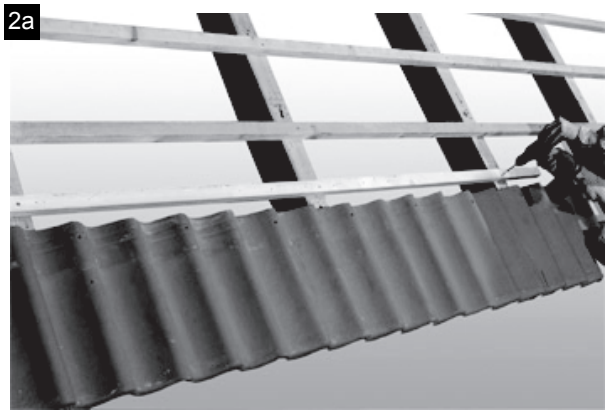

2a. Attach the installation batten below, self-taping screws 5*60

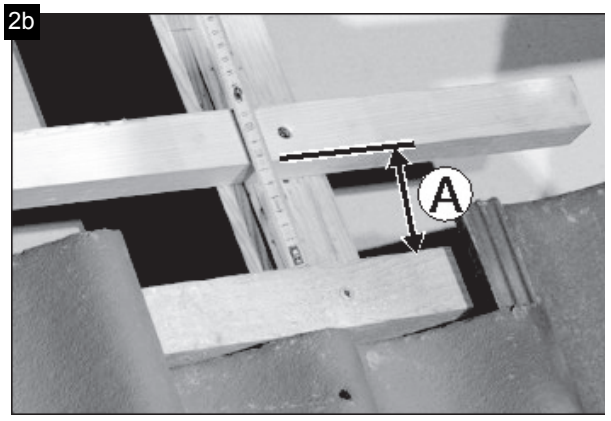

2b. Measurement A = 80mm for tile sheet metal edging

Measurement A = 50mm for shingle and crown tile sheet metal edging

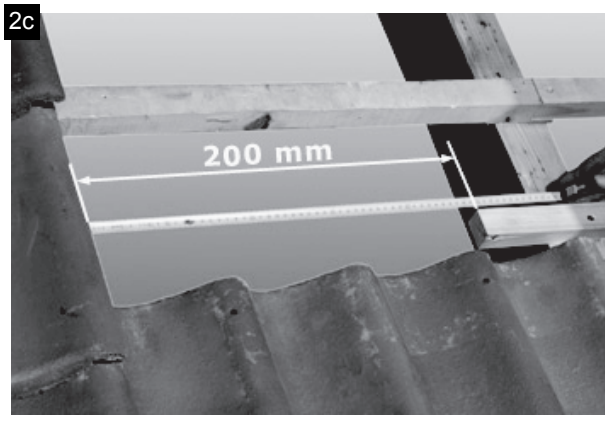

2c. Measurement B = 200mm or tile width + 50mm

18 IN ROOF MOUNTING (TS 8001)

3

3. Fasten the attachment bracket on the installation batten as shown on the attachment diagram (see Frame 28), self-tapping screws 5*40.

4

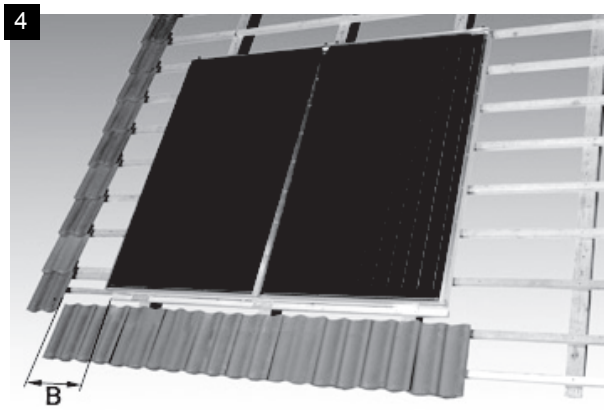

4. Set and align collectors on the roof.

5

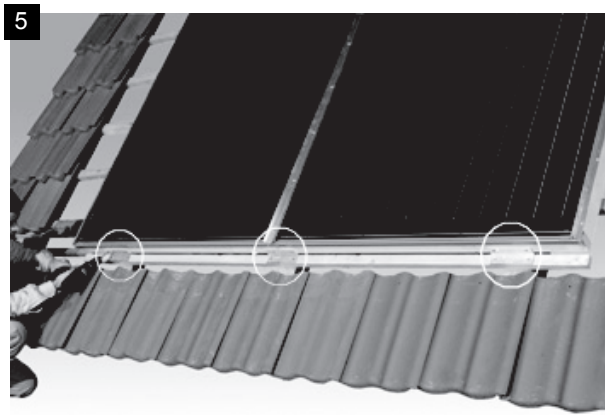

5. Fasten the collectors to the attachment bracket, self-tapping screws 5*40.

6

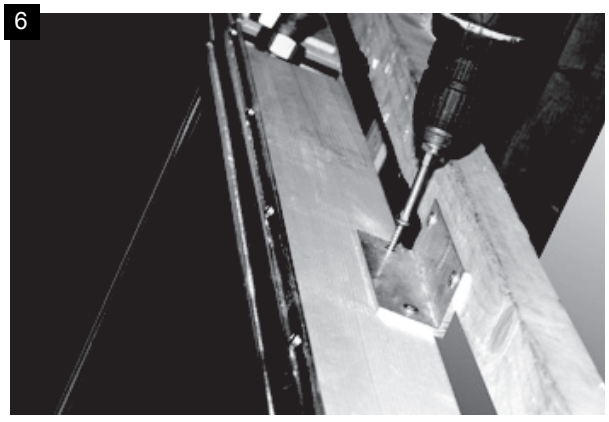

6. Secure the collectors to the upper attachment bracket, 1 bracket in the centre of each collector glass, self-tapping screws 5*40.If necessary, install upper installation batten, self-tapping screws 5*60.

19 IN ROOF MOUNTING (TS 8001)

7

7. Hydraulically connect the collectors using short connecting bends.

8a

8. Connect the roof-integrated connection set (8a/8b). Alternative: Create a CU connection using a soldered connection. Install the sensor with the sensor tube extension at the forward flow.

8b

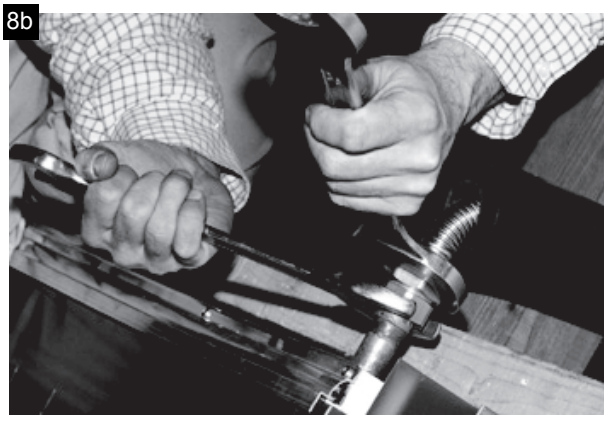

9

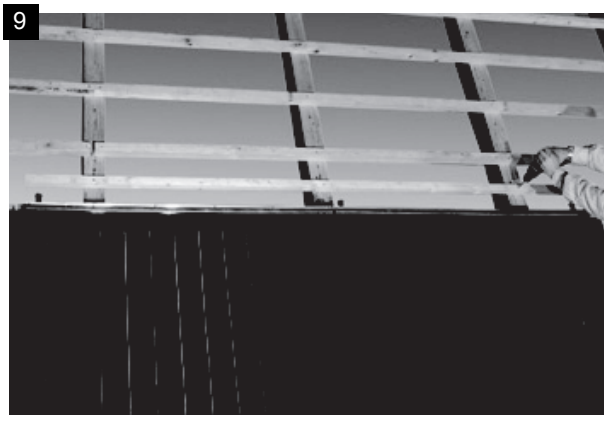

9. If installing a second row install the installtion batton for the second row of collectors using the provided 5 x 60 self tapping screws. The distance between the upper and lower rows should be 200mm.

20 IN ROOF MOUNTING (TS 8001)

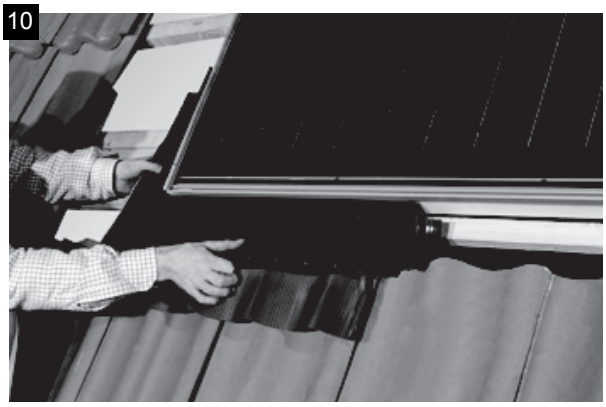
10

***Warning**: The collector array must be checked for leaks before installing the metal casing!*

10. Slide the front corner section to the left into the required nut of the glass lower bar. Note: Before installing the underside of the metal casing, remove the collectors' lower protection piece!

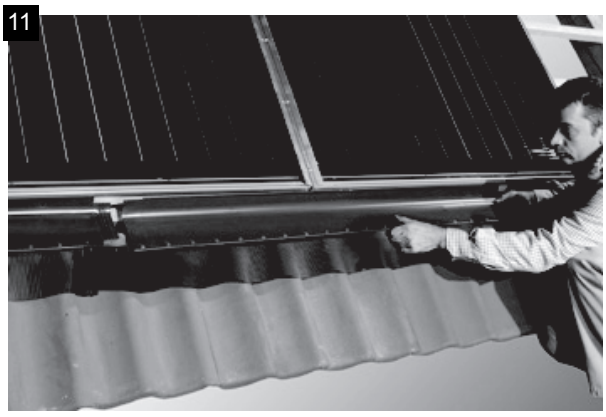
11

11. Slide the front section into the middle.

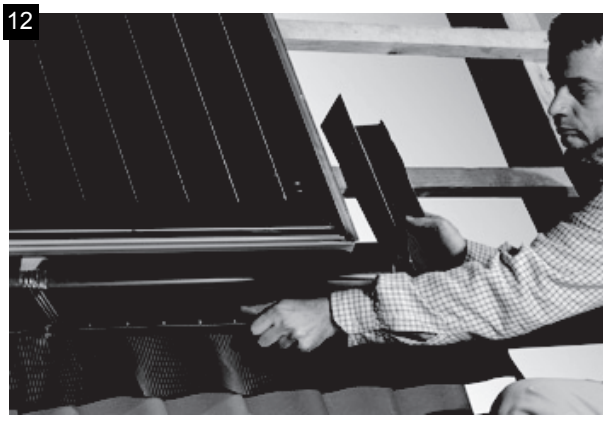
12

12. Slide the front corner section to the right.


13

13. Secure the front section on the required positions (stampings) using sealed plumbing screws 4.5*35.

21 IN ROOF MOUNTING (TS 8001)

Repeat steps 14, 15, 17, 18, 19 and 20 for second collector row accordingly

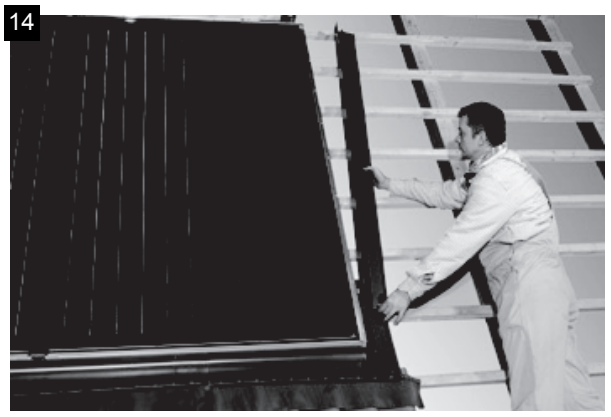

14. Install the side pieces on the right and left. Upper edge of the sheet metal flush with the upper edge of the collector.

15. Secure the side pieces to the roof batten using metal retainers and roofing nails.

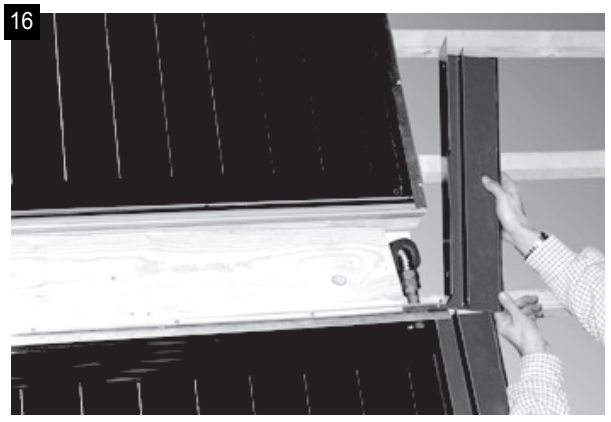

16. Place the metal wedge in the middle between the collector rows and tighten it on the roof structure using self-tapping screws 6*120. Install the side piece connector on the right and left.

22 IN ROOF MOUNTING (TS 8001)

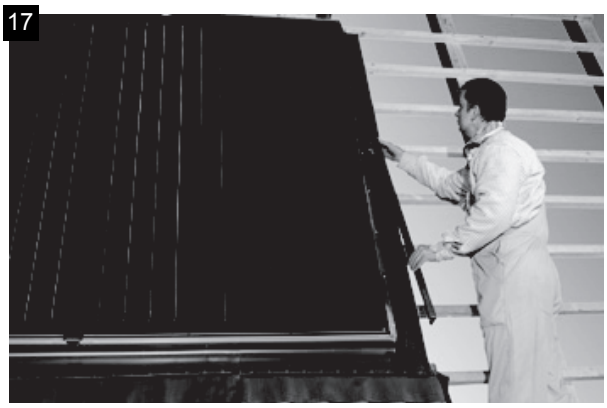

17. Attach the lateral cover strip on the right and left.

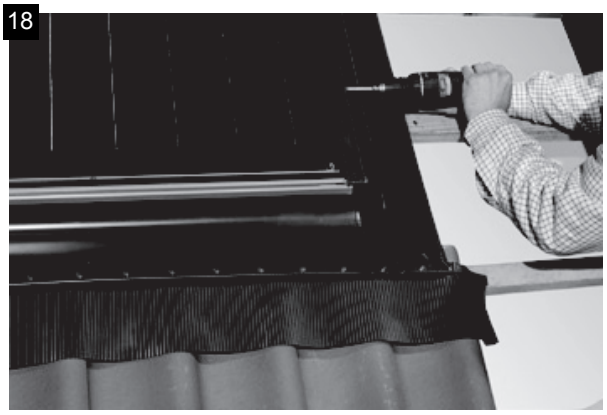

18. Attach the side tin cover strip to the front corner section on the right and left at the collector using sealed plumbing screws 4.5*35.

19. Push the middle cover strip (between adjacent collectors) from the bottom as far as it can go.

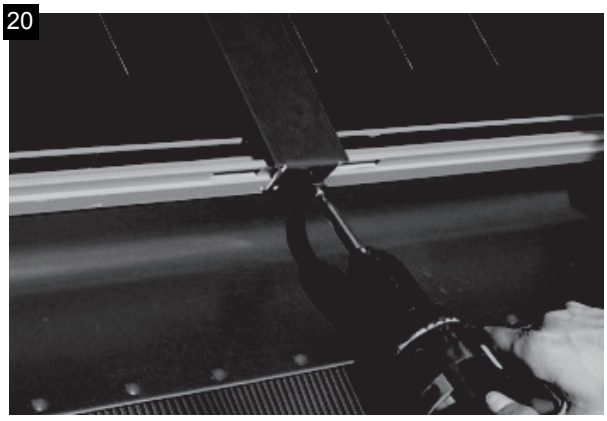

20. Tighten the middle cover strips using two self-drilling sealed plumbing screws and the lateral tin cover strip using one self-drilling sealed plumbing screw 3.9*13.

23 IN ROOF MOUNTING (TS 8001)

21. Slide in the middle cover on the left.

22. Slide in the middle cover to the centre.

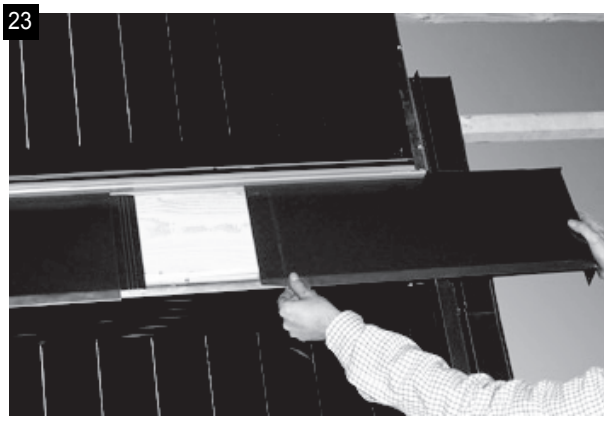

23. Slide in the middle cover on the right

24. Tighten the left and right middle cover to the side tin cover strip and the collector on the required position using a self-drilling sealed plumbing screw 4.5*35

24 IN ROOF MOUNTING (TS 8001)


25a

25. Place the metal wedge in the middle above the collector and tighten it on the roof structure, self-tapping screws 5*120. Hang the left rear corner section (27b) in the collector.

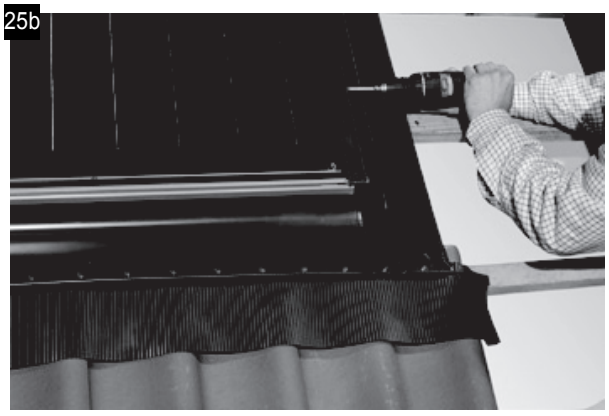
25b


26

26. Tighten the left rear corner section outside of the reinforcing seam on the wooden wedge, self-tapping screws 4*25

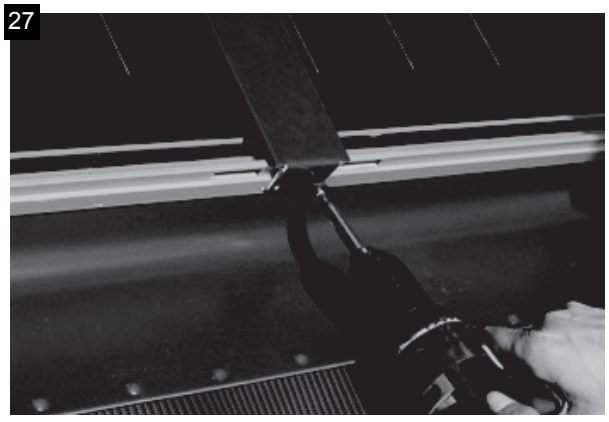
27

27. Hang the middle rear section in the collector and connect the rear left corner section. Tighten the sheet metal outside of the rein-forcing seam using a self-tapping screw 4*25.

25 IN ROOF MOUNTING (TS 8001)

28

28. Hang the right rear section in the collector and connect it to the middle rear section

29

29. Tighten the rear section on the left and right side to the cover strip and the collector using a sealed plumbing screw 4.5*35

30

30. Laterally secure the right and left rear corner section to the roof batten using metal retainers and roofing nails

31. Glue the foam rubber wedge on the side and the top (applies to sheet metal edgings for tile roofs only!)

31a

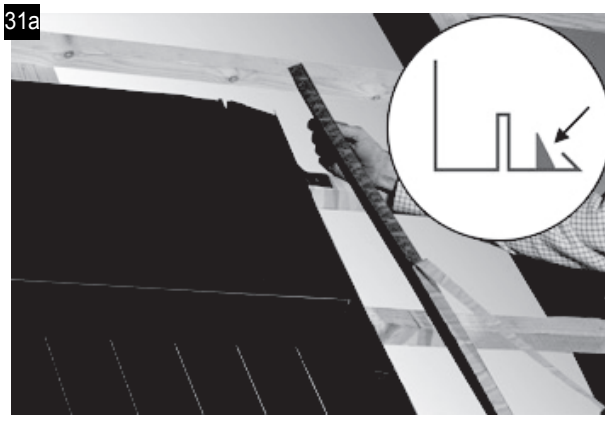

31b

26 IN ROOF MOUNTING (TS 8001)

32

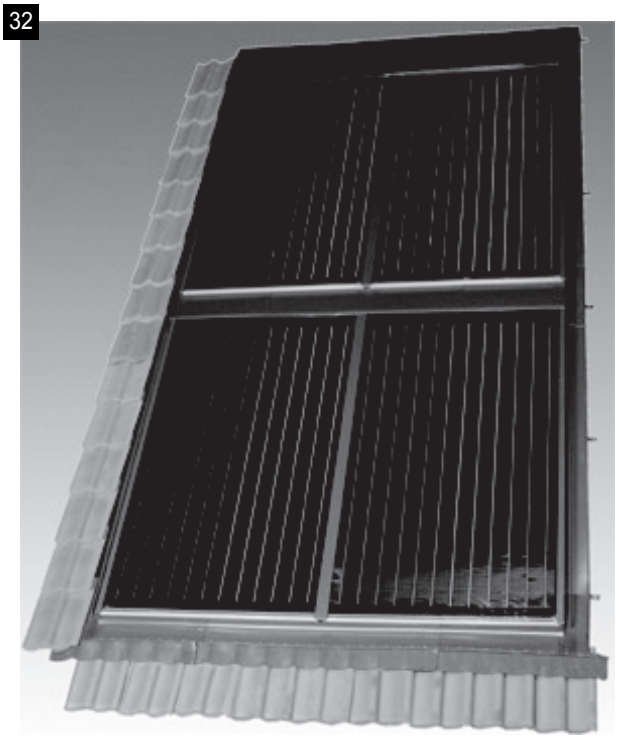

32. Cover the collector field. If necessary, the tile must be cut to the appropriate size using an angle grinder. The top projecting end of the tile must be 80 and 140mm over the metal edge.

33

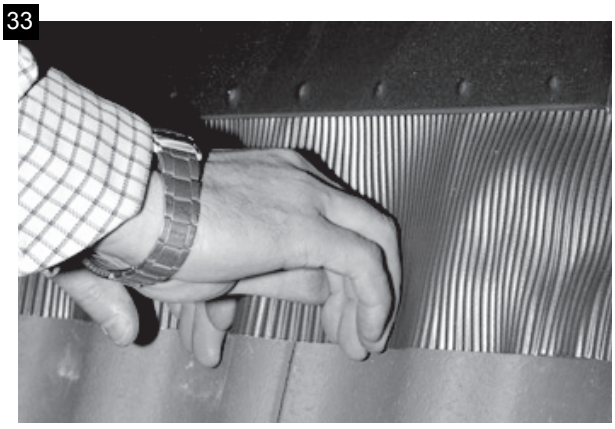

33. Finally, adjust the lead skirting (for sheet metal edging with tile roofs only) to the contour of the tile.

34

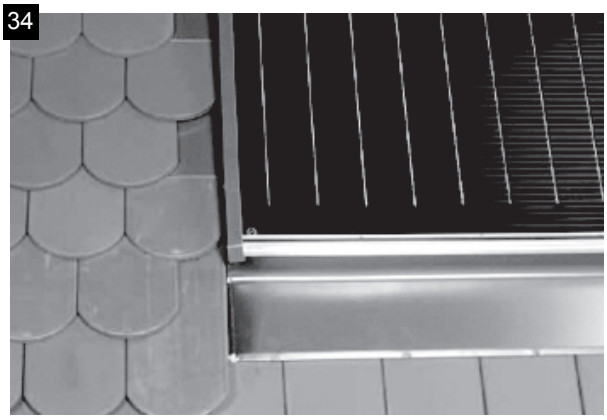

34. Note: When installing the side sections of the plain-tile metal casing, the tiles and metal parts must always be alternately co-vered!

27 INFORMATION ABOUT THE COLLECTOR (TS 8001)

Technical Data					
Gross area	m^2	2,52	Weight	kg	47
Net ara	m^2	2,32	Contents	1	1, 7
Aperture	m^2	2,28	Max. Pressure	bar	10

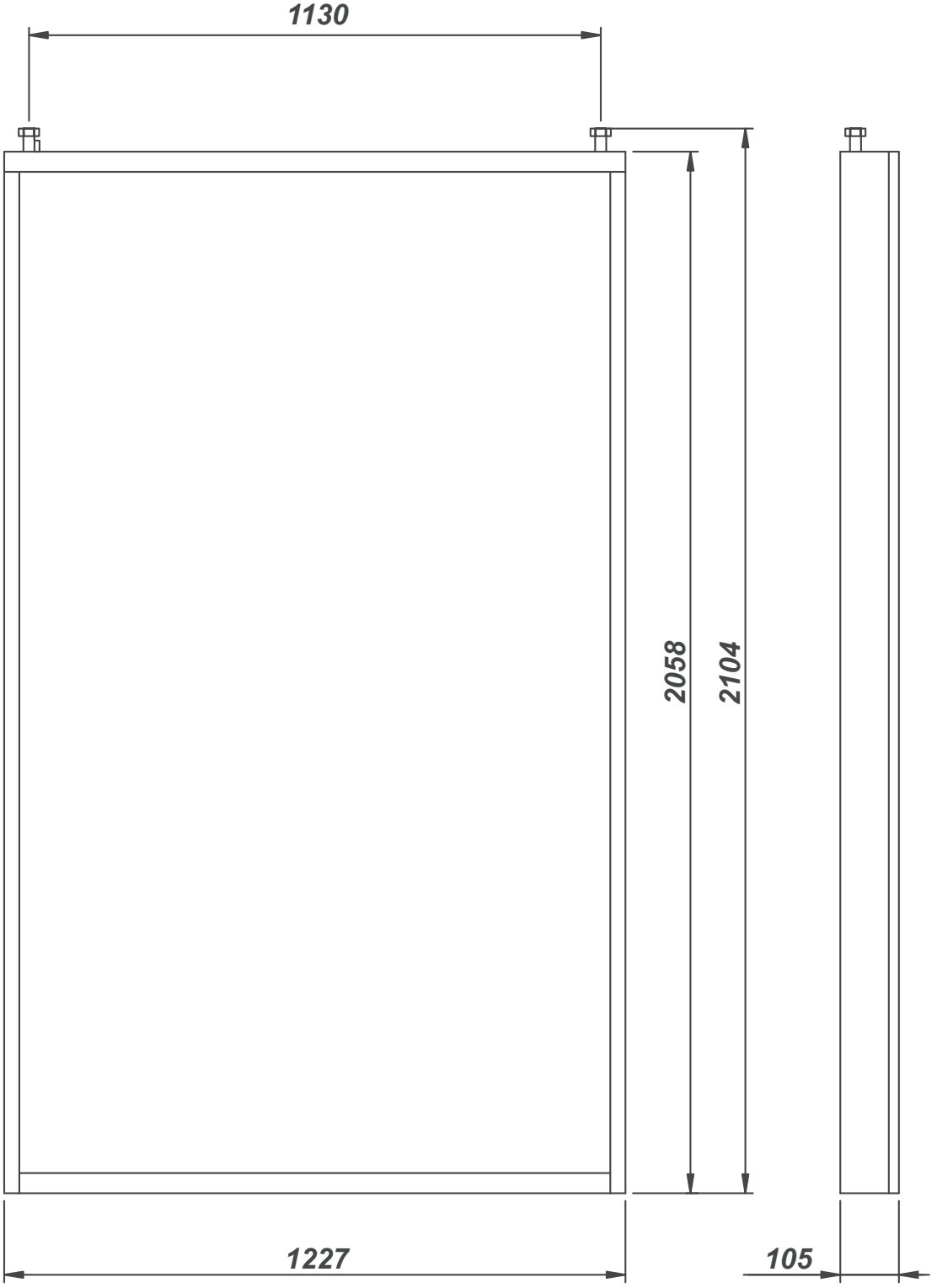

28 IN ROOF MOUNTING (TS 8001)

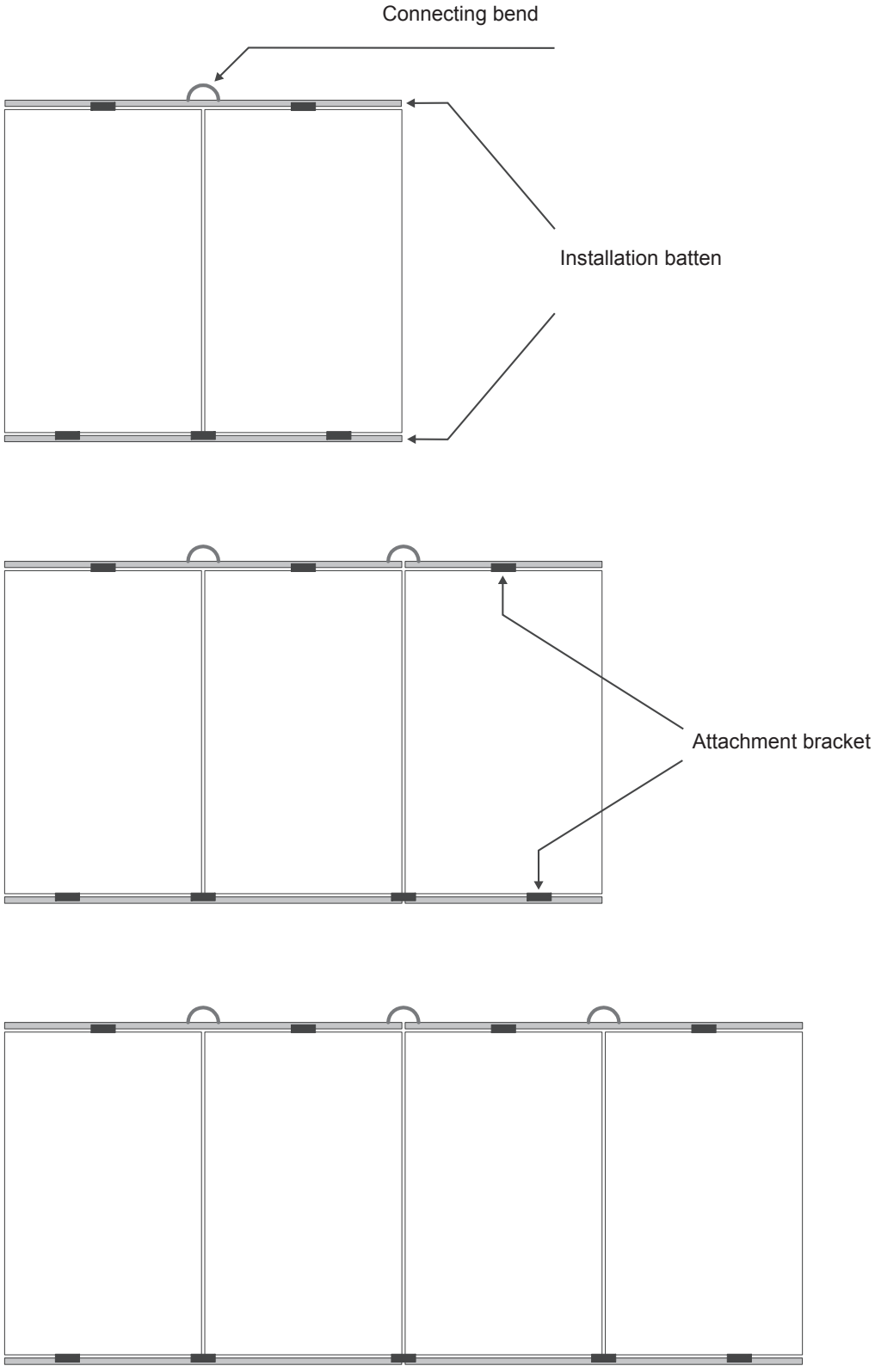

29 OPERATING TIPS - SOLAR POWER SYSTEM TS8001

Connecting the collectors to one another

The diagram below is an example of how the collectors can be connected to one another. However, the actual connection may be different depending on structural conditions. A maximum of 6 collectors may be connected in a series. If a collector panel is made up of more than 6 collectors, the panel must be connected several times in parallel.

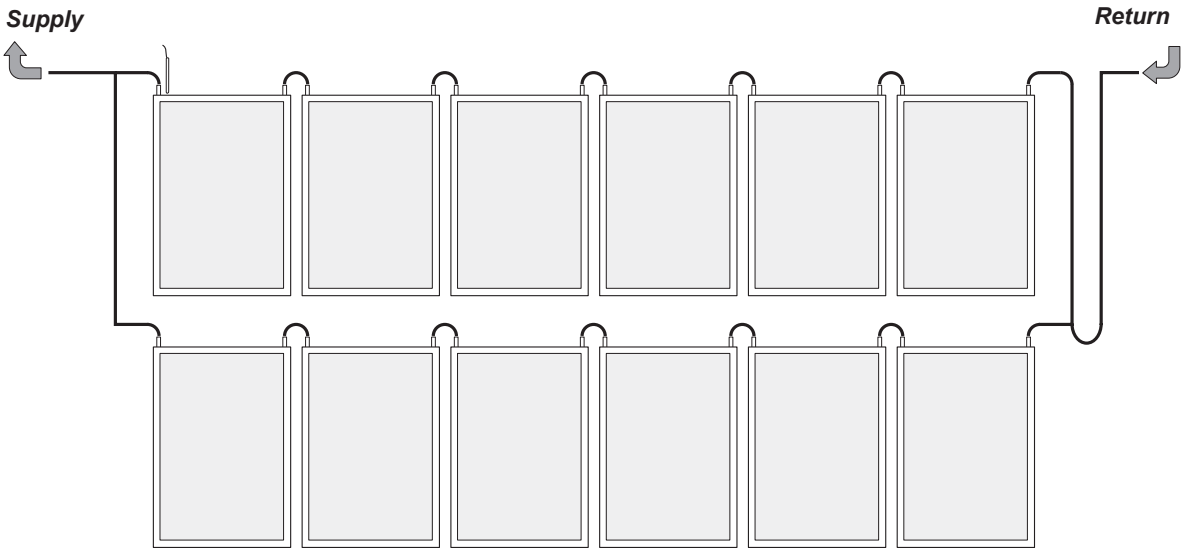

Mass Flow Rate

To ensure the performance of the collector, a specific flow rate of 30 l/m²h is to be selected up to a collector panel size of approx. 25m².

Pipe Diameters

Dimensions table with a specific flow rate of 30 l/m²h

Collector panel size [m²]	approx. 5	approx. 7.5	approx. 12.5	approx. 25
Pipe diameter / copper [mm]	10 - 12	15	18	22
Pipe diameter / stainless steel corrugated pipe	DN16		DN20	

Pressure loss collctor for anti-freeze / water mixture (40% / 60%) at a thermal conducting temperature of 50ºC

Pressure loss curve: $\Delta p = 0{,}0001579x^2 + 0{,}0274717x$

Mass flow rate [kg/h]	0	50	100	150	200	250	300	350	400	450	500
Pressure loss [mbar]	0	1,8	4,3	7,7	11,8	16,7	22,5	29,0	36,3	44,3	53,3

30 OVERVIEW OF MATERIALS - FLAT ROOF KIT (TS8000)

Bench screw M12*350

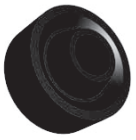

Rubber seal

M12 washer

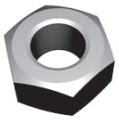

M12 hex nut

Clamping piece

Clamping piece extension

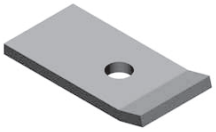

Mounting part, top

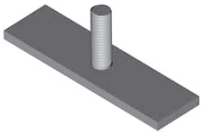

Mounting part extension

M8 washer

M8*30 hex bolt

M8*30 hammer-head bolt

M8 hex nut

Attachment bracket

Base bracket

Support bracket

Support rail

Mounting jig

Flat gasket

31 IN ROOF MOUNTING (TS 8001) - MOUNTING SYSTEM 45° ELEVATION

1

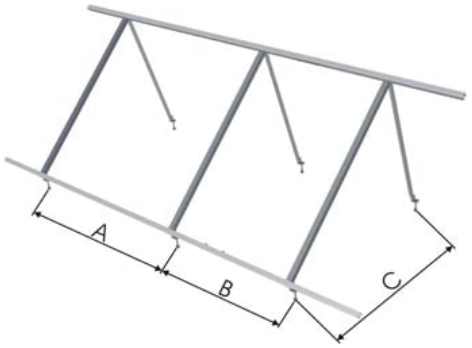

General Note: Points 9,10,11,16 and 17 of these instructions only apply when mounting more than two collectors!

1. Measurement C = 148cm (A/B see previous side)

2

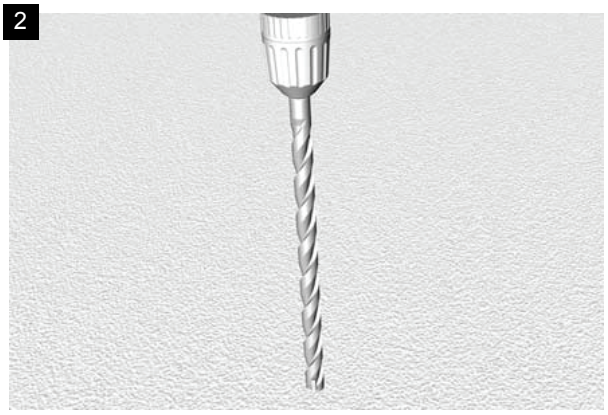

2. Drill holes in foundation / wood Ø 8mm, concrete as required

3

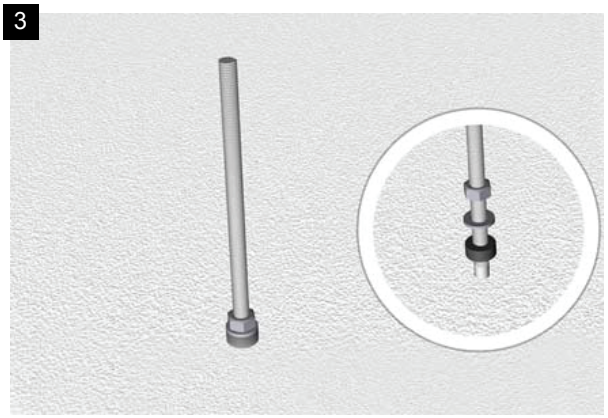

3. Attach the rubber seal, screw it in and then fasten (minimum screw depth ≥ 100mm)

   Order: rubber seal – washer – nut

4

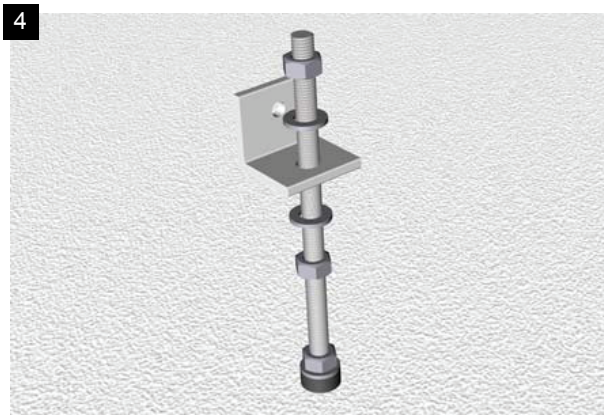

4. Align the attachment brackets at the same height and fasten

   Order: nut – washer – attachment bracket – washer – nut

32 IN ROOF MOUNTING (TS 8001) - MOUNTING SYSTEM 45° ELEVATION

5

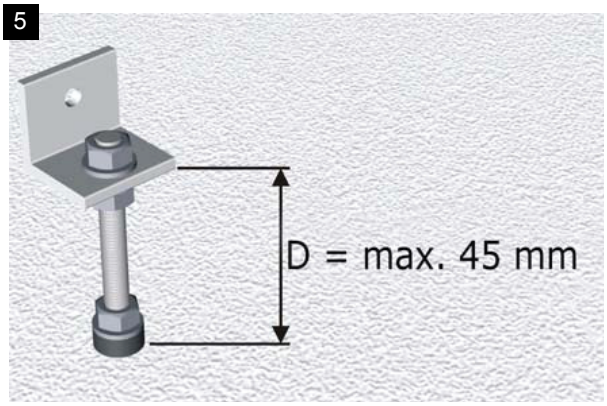

5. Cut off any excess length from the bench screw. (Measurement D = max 45mm)

6

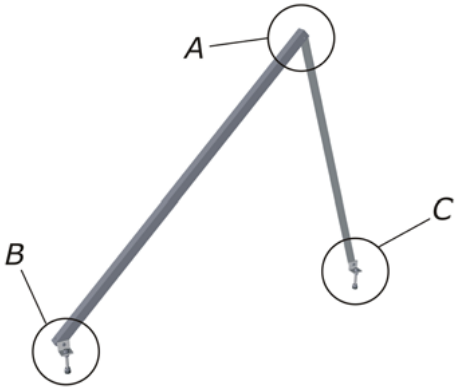

6. Attach the first mounting triangle as described in 6a-6c

6a

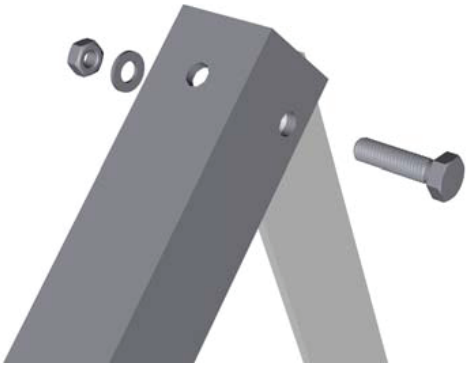

6a. Screw the base bracket to the support bracket (A)

Order: screw – base bracket – support bracket - washer – nut

6b

6b. Screw the base bracket to the attachment bracket on the front (B)

Order: screw – attachment bracket – base bracket – washer – nut

33 IN ROOF MOUNTING (TS 8001) - MOUNTING SYSTEM 45° ELEVATION

6c

6c. Screw the support bracket to the attachment bracket on the back (C)

Order:
screw – attachment bracket – support bracket – washer – nut

6d

6d. Attach the second mounting triangle as described in 6a-6c

7

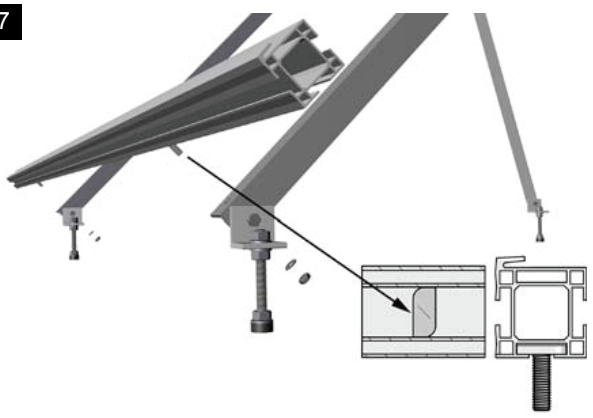

7. Slit T-head bolt into the lower groove of the mounting rail and screw it to the mounting part using a washer and hexagon nut.

   Order:
   mounting rail - hammer-head bolt - mounting part - washer - nut

8

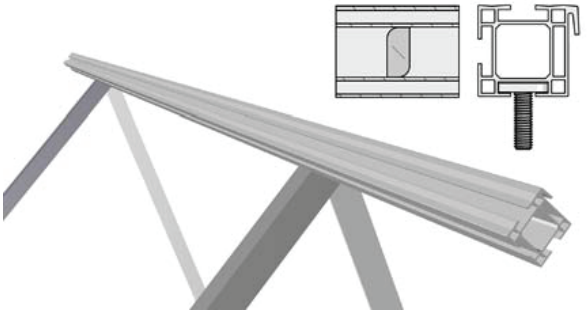

8. Attach upper mounting rail as described in Point 7

***Warning**: Upper and lower mounting rails must be mounted perfectly straight and parallel to one another!*

34 IN ROOF MOUNTING (TS 8001) - MOUNTING SYSTEM 45° ELEVATION

9a

9a. Push the clamping piece extension halfway into the inner groove of the mounting rails (upper and lower) and tighten
Order: mounting rail – clamping piece extension – washer – nut

9b

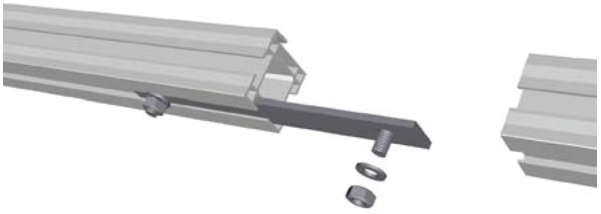

10

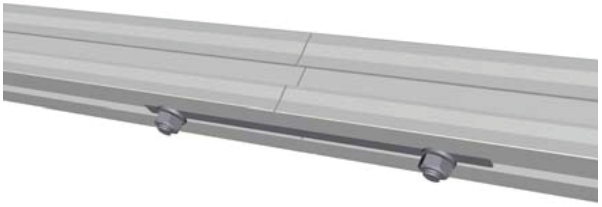

10. Insert the following mounting rails (upper and lower) and attach them using the clamping piece extension

Order: mounting rail – clamping piece extension – washer – nut

11

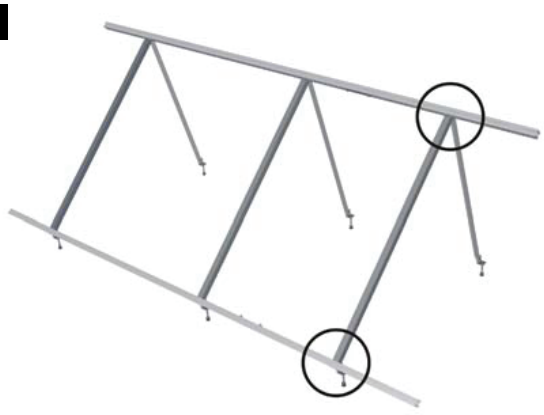

11. Attach the mounting rails (upper and lower) using the base brak-kets

Order:
support rail – hammer-head bolt – base bracket – washer – nut

35 IN ROOF MOUNTING (TS 8001) - MOUNTING SYSTEM 45° ELEVATION

12a

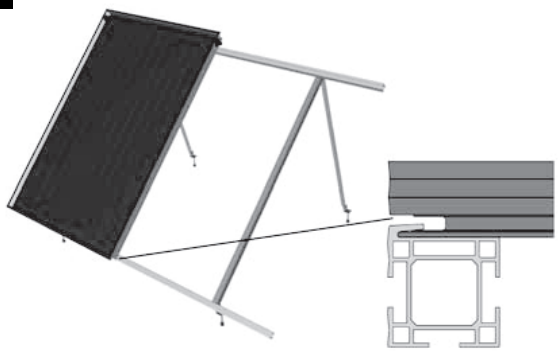

12. Hang the first collector in the lower mounting rail and adjust (12a + 12b!)

    Note: Distance between collector and end of mounting rails = 45mm

12b

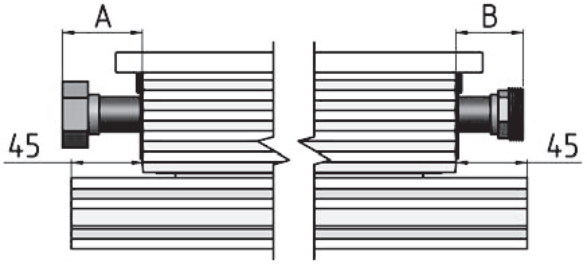

13

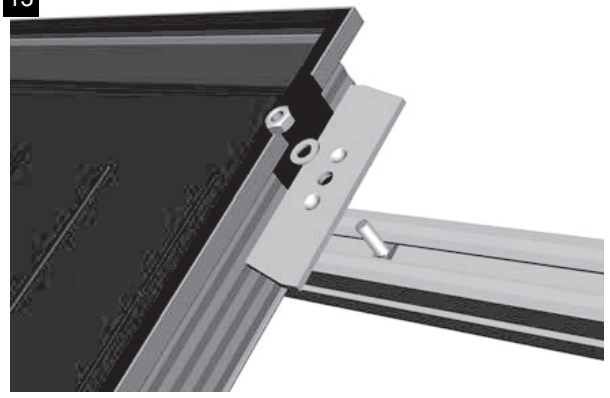

13. Place the clamping piece on the upper mounting rail and hand tighten for now

    Order:
    upper mounting rail – hammer-head bolt – clamp – washer – nut

14a

14. Attach the second collector.
    (measurement A = measurement B as shown in Figure 12b)

    Please use the mounting jig (14b).

36 IN ROOF MOUNTING (TS 8001) - MOUNTING SYSTEM 45° ELEVATION

14b

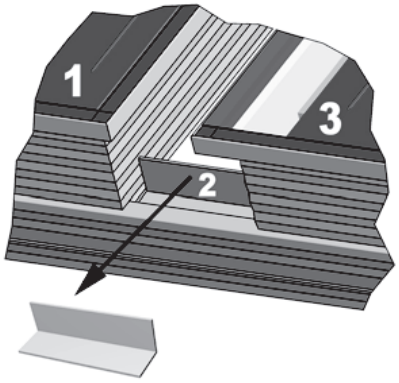

15

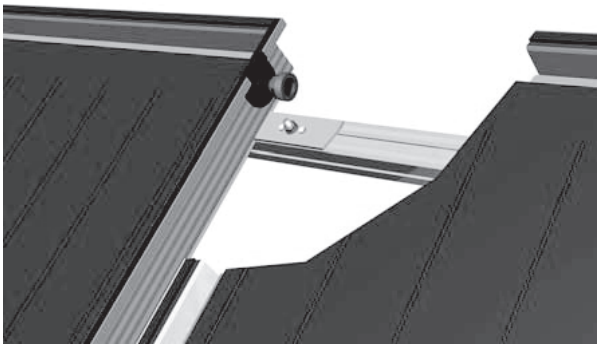

15. Rotate the clamping piece by 90° (see figure 13) and screw it tight using a long socket wrench

16

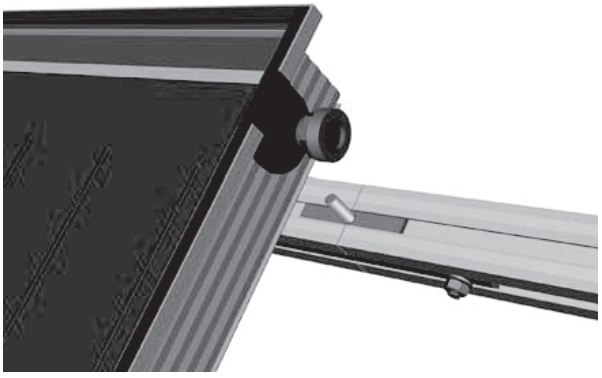

16. With clashing mounting rails, insert and position the mounting part in the upper mounting rail

17

17. Attach additional clamping pieces / collectors as described in Points 12–16

37 IN ROOF MOUNTING (TS 8001) - MOUNTING SYSTEM 45° ELEVATION

18

18. Attach the mounting part on the upper left and right end of the collector field

    Order:
    mounting rail – hammer-head bolt – mounting part – washer – nut

19

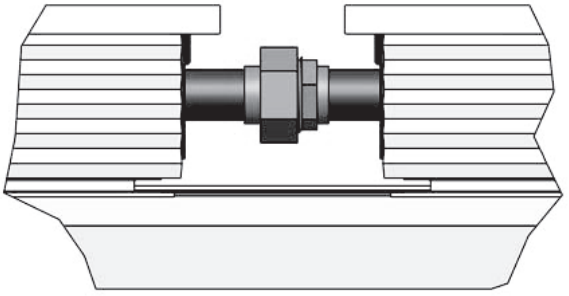

19. Screw the collectors into place with the proper torque

38 OPERATING TIPS (TS8000 & TS8001)

Flushing and Filling

For safety reasons, you should only fill the collectors when there is no direct irradiation from the sun (or cover thecollectors). Especially in regions exposed to frost, for flat plate collectors you should use a mixture of (FS) antifreeze with water (40% antifreeze). The solar thermal system should be filled and commissioned within one week of installation, because heat build-up in the collector (array) can damage the flat gaskets in empty systems. If this is not possible, the flat gaskets should be replaced before commissioning to prevent leakage.

***Attention**: Antifreeze that is not pre-mixed must be mixed with water prior to filling!*

Recommended antifreeze for flat plate collectors: TYFOCOR-L

40% proportion of antifreeze (60%/water) - freezing point: -22° C/solidification point: -26° C
50% proportion of antifreeze (50%/water) - freezing point: -32° C/solidification point: -44° C

It may not be possible to completely empty collectors once they have been filled. For this reason, collectors exposed to frost should only be filled with a water/antifreeze mixture, also for pressure and function tests. Alternatively, the pressure test can also be carried out using compressed air and leak detection spray.

Installing the Temperature Sensor

The temperature sensor should be installed in the sensor sleeve nearest to the collector array flow. To ensure optimal contact between the sensor and the surrounding environment, the gap between the sensor sleeve and the sensor element should be filled with a suitable conducting compound. All materials used for installing temperature sensors (sensor element, conducting compound, cables, sealing and insulating materials) must be suitably temperature resistant (up to 250° C).

Operating Pressure

The maximum operating pressure is 10 bar.

Bleeding

The system must be bled:

- when commissioning the system (after filling the collectors)

- 4 weeks after commissioning

- when necessary, e.g. if there are malfunctions

***Warning**: Risk of scalding due to steam and hot heat transfer fluid!*

Only operate the bleeding valve if the temperature of the heat transfer fluid is **< 60° C**.
When bleeding the system, the collectors must not be hot! Cover the collectors and, if possible, bleed the system in the morning.

Check Heat Transfer Fluid

The heat transfer fluid must be checked every two years with regard to its antifreeze and pH value.

- Check antifreeze using antifreeze tester and replace or refill if necessary!
  Target value is ca. - 25° C and - 30° C depending on climatic conditions.

- Check pH value with a pH indicator rod (target value approx. pH 7.5):
  If the limit pH value is less than ≤ pH 7, replace the heat transfer fluid.

Maintenance of the Collector

The collector or the collector array must be inspected visually, once a year, for any damage, leaks and contamination.

Additional recommendations on operation and maintenance can be found in the supplier's general documentation and instructions on commissioning and maintenance.

39 PUMPING STATION 2-WAY “SOLAR 3”

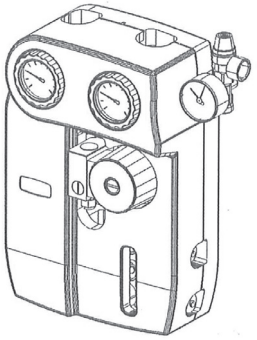

EPP insulation box
Mesurements 277x425x150 side opening on the back part of the insulation box for the security unit. A special window allows to read to adjust the flow without taking off the cover. Back plate to fasten the unit to the wall or to the cylinder.

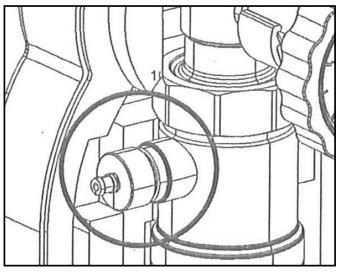

The vent air is a device that divides continually the air that can be in circulation together with the fluid. The air goes to the upper part of the vent air and it can be eliminated through the special drain while the installation is working. unscrew of 360º the knurled metal ring lock. This operation ahs to be done at intervals.

DANGER OF BURNS - To avoid any leakage of the fluid, taking into consideration the very high working temperature, we recommend to fasten a pipe to the end of the drain

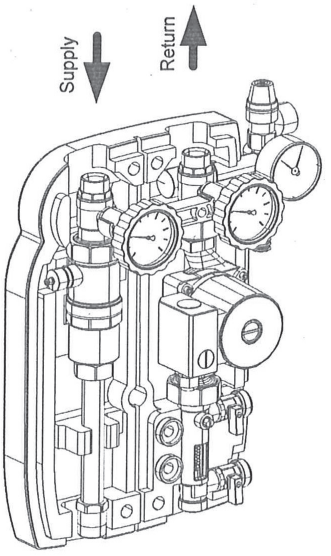

Back plate to fasten the unit to the wall or to the cylinder

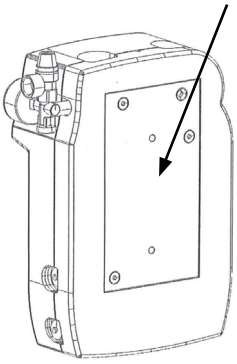

Fastening holes on the back fixing plate. special openings on the insulation box allow the fastening without disassembling the unit.

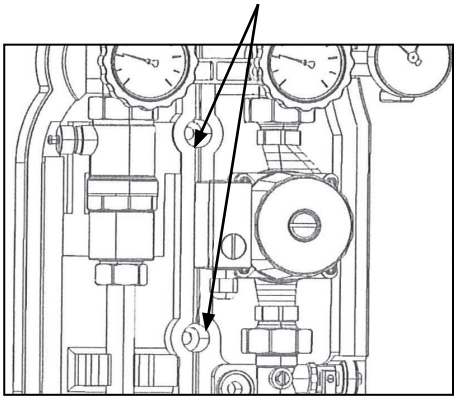

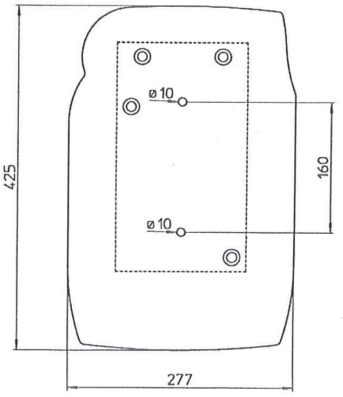

Directions for the use of the flowmeter to fill the installation:

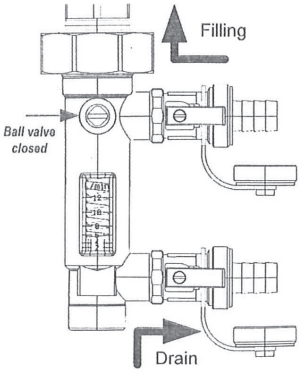

(1) - Filling the installation:
Remove the plugs from the side valves and connect the hose unions. Close the ball valve and open the side filling valve and draining valve.

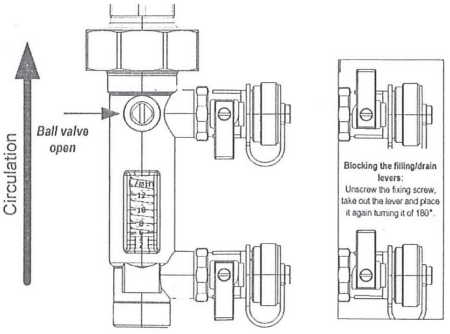

(2) - Starting the installtion working:
Open the ball valve and close the side filling and draining valves. Remove the hose unions and screw again the plugs. to avoid any casual opening of the side valves, it is better to stop the levers in the close position, as shown here aside.

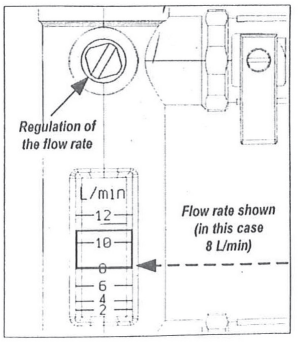

(3) - Regulate the flow rate using the regulation rod until the right flow rate is shown.
N.B. The flow rate is shwon taking as reference the lower edge of the sliding cursor. (see picture).

40 BRACKET AND CONNECTION KIT FOR THE EXPANSION VESSEL

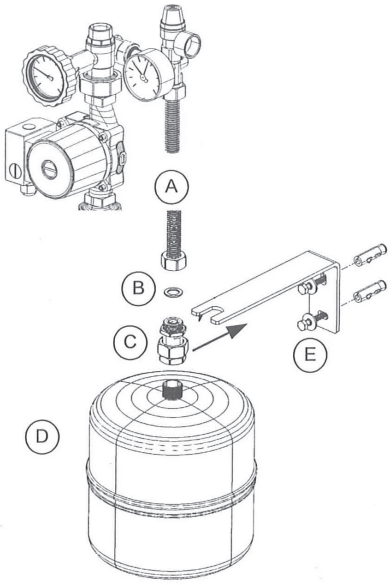

A. 3/4” flexible pipe connected to the security unit of the solar pumping station (not included).
B. Fibre sealing joint inlcuded.
C. Connector with double check valve to disconnect the expansion vessel in a reliable and fast way without any leakage.
D. Expansion vessel with 3/4” threaded connection (available on request).
E. Fixing bracket provided with plugs and screws to fix it to the wall

Fix the bracket (E) to the wall with the plugs (centre distance 55mm)
Screw the expansion vessel (D) to the connector (C) and put it on the fixing bracket using the special groove then lock with the nut.
Put the sealing joint (B) and screw the flexible pipe of the security unit (A) to the connector.

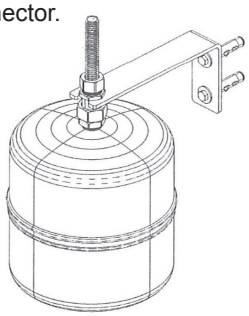

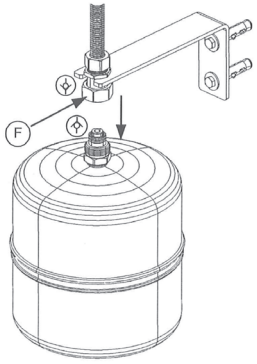

Replacement of the Expansion Vessel

The connector (C) holds up the expansion vessel and allows a quick detachment of it avoiding any leakage.

By unscrewing the nut (F) it is possible to disconnect one end of the connector that remains screwed to the expansion vessel. The other end of the connector stays fixed on the bracket connected to the security unit.

both ends have a check valve that becomes operative at the time of the disconnection: this prevents any leakage both from the expansion vessel and from the flexible pipe.

To refit the expansion vessel connect the two ends of the connector and to fix them by screwing the nut (F). In that way the two check valves are disconnected and the expansion vessel is again connected to the installation.

Safety Relief Valve / Pressure Gauge Assembly

The Hydraulic solar pump station in the Ideal solar package is equipped with a 6 bar pressure relief valve which should be connected via 22mm pipe work terminating in a suitable container. An empty canister of heat transfer fluid can be used for this purpose .

Drain Valve

It is good practice to install a suitable drain valve at the lowest point in the system to facilitate draining of the solar system if required.

Connecting the Solar Cylinder

Refer to solar cylinder manufacturer’s instructions for installation, observing the correct direction of flow through the cylinder coil. Refer to Frame 1.

Double Return Kit

If additional flow capacity is requried the single line pump station (Ideal Part No. UIN 207072) can be employed. within this kit an additional collector return pump and connector tee is provided. During installation the safety relief valve and pressure gauge is transferred from the twin line pump station to the single line station.

A flow gauge is provided in the single line pump station so the flow rate between the two flow rates can be balanced.

The single line pump station is also employed when installing solar panels in East-West configuration.

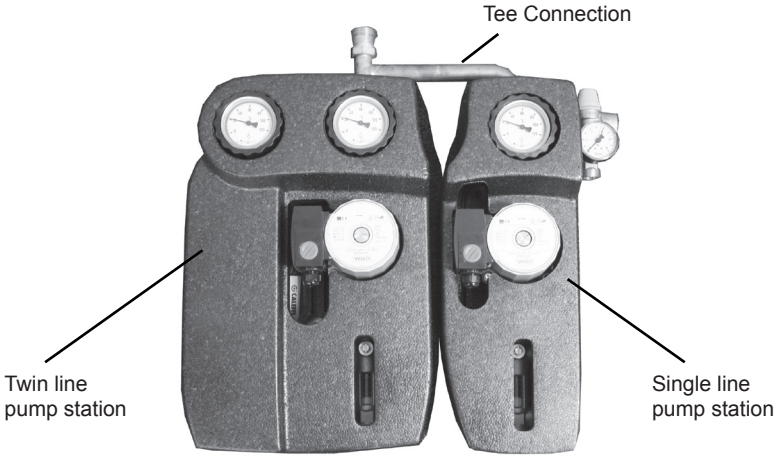

41 IDEAL SOLAR CONTROLLER - SAFETY INSTRUCTIONS

1. Please see that fire safety cable systems and similar systems are not impaired.
2. The controller must not be installed and used in damp areas (e.g. bathrooms) or in rooms in which flammable gas mixtures (by gas bottles, paint solvents etc.) are likely to occur.
3. Do not store any of the above or similar items in a room where the solar controller is installed.
4. The controller must not be installed on a conductive base.
5. All operations must be conducted in accordance with the national electrical regulations and local rules.
6. For your own safety please note the following for electrical installation:

   The controller has been built for the use at 230 V (±15 %) AC at a frequency of 50 Hz. Using this controller for other voltage values is not allowed. Please also note that the admissible nominal currents must not be exceeded. If there is a grounded conductor planned or laid down for pump or reversing valve it MUST also be connected. There are corresponding supply terminals. Please make sure that the earthing contact is led to the controller also on the power supply side.
7. Wires that are not permanently connected with the building have to be equipped with a strain relief clamp outside the controller. The controller is only for the prescribed applications. No liability is taken over for other utilization. All operations on an open controller are only to be conducted cleared from the power supply. All safety regulations for working on the power supply are valid. Connecting and/or all operations that require opening the controller (e.g. changing the fuse) are only to be conducted by a Solar competent heating engineer. The controller is protected against overload and short circuit.

42 IDEAL SOLAR CONTROLLER - MOUNTING

Installation Site

The controller is designed for assembly on vertical walls. Installation of the controller is only permitted in an area that provides appropriate protection (see technical data). The ambient temperature at the installation site may never fall short of or exceed the maximum ambient temperature allowed.

Wall Mounting

1. The internal controller cover protects the controller's electronics and may not be removed for installation purposes.
2. Drill and plug the wall in the desired position. Affix the central screw and place the controller in position.
3. The controller can be used as a template to mark both additional mounting holes.

NOTE. *Only use the controller as a marking template, never as a drilling template.*

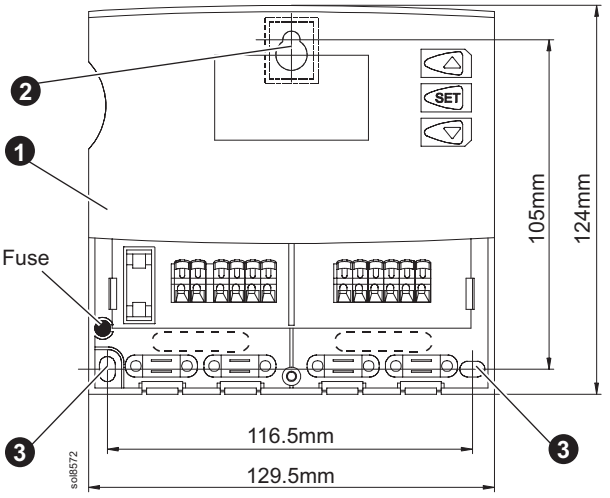

43 IDEAL SOLAR CONTROLLER - CONNECTIONS

1. The cable can be fed through the underside of the controller or back panel of the housing depending on the installation.
2. The cable entry in the housing tray must first be cut out to insert the cable from the underside of the controller.
3. Each cable inlet requires 2 vertical incisions in the wall of the plastic tray. A cable knife or an electrician's side cutting pliers can be used as a cutting tool.
4. Flexible wiring must be secured in the controller with the attached strain relief clamps.
5. If the controller must be wired through the back panel of the housing tray, the punch out holes can be used for the cable entry. For this, an external strain relief is provided.

WARNING. THE CONNECTION WORK DESCRIBED HERE IS ONLY POSSIBLE WHEN THE CONTROLLER'S FRONT COVER IS OPEN. DISCONNECT THE MAINS! ALL APPLICABLE INSTRUCTIONS FOR WORKING ON THE MAINS MUST BE OBSERVED! THE MAINS MAY FIRST BE SWITCHED ON WHEN THE CONTROLLER HOUSING IS CLOSED. IN ADDITION, THE INSTALLER MUST ENSURE NOT TO INFRINGE THE IP DEGREE OF PROTECTION WHEN INSTALLING THE CONTROLLER.

The mains, pump and sensor connections must be connected according to the terminal plan below. If an Earth conductor is intended or required for the pump, the Earth conductor must be connected. The corresponding Earth conductor wire terminals are provided. Ensure that the ground contact is also connected to the controller's mains supply side.

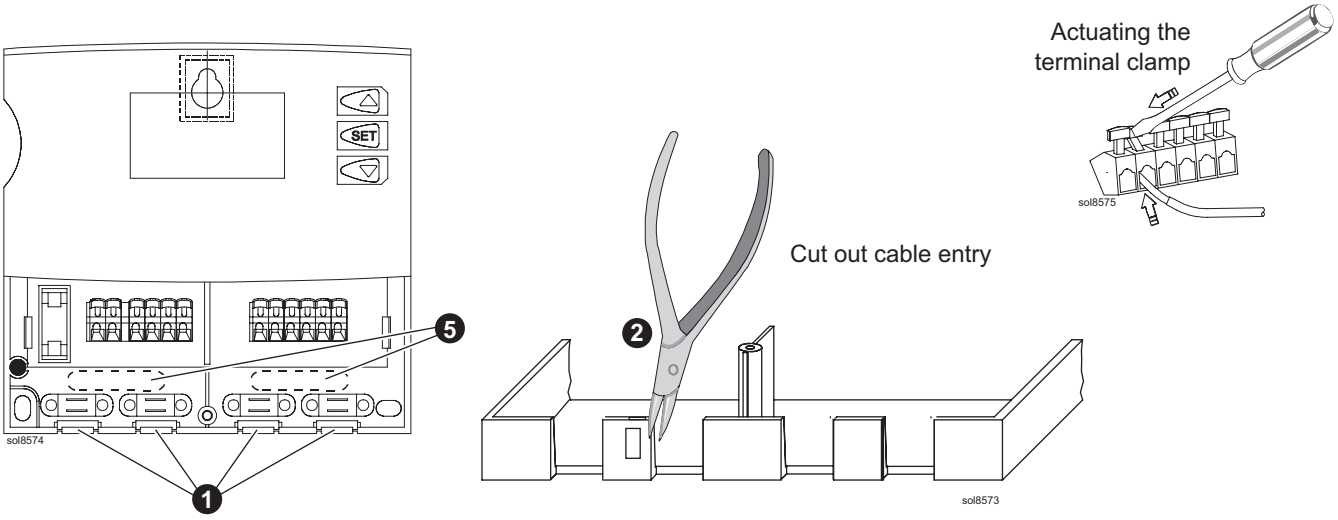

Each clamp may only be allocated one connecting cable (up to 2.5mm²). Connector sleeves must be used with finely stranded cables.

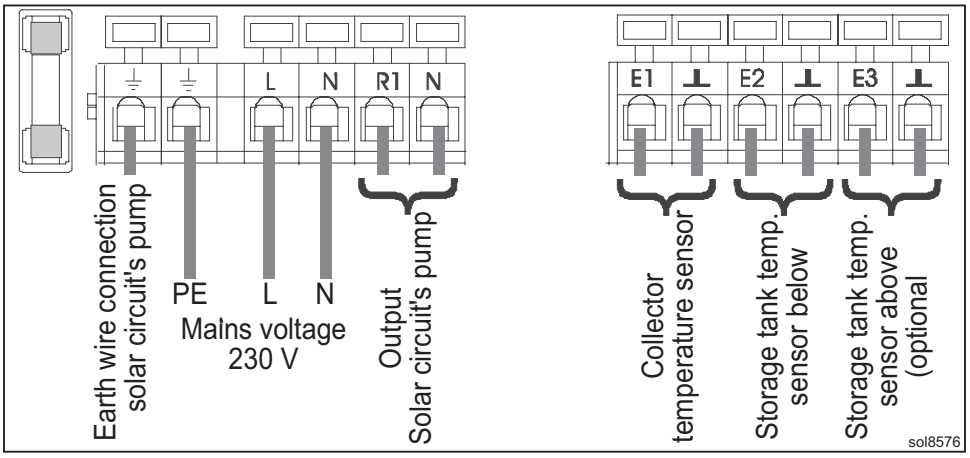

Temperature Sensor

Warning. Only the original sensors permitted for the controller may be used. This is the PT1000 sensor type. Temperature sensors and silicon cables are heat resistant up to +180°C. The polarity of the sensor contacts is irrelevant. All sensor leads are low voltage and must be installed separately from the 230V or 430V lead sensors to prevent any inductive interference (at least 100mm apart). If external inductive interference is to be expected, e.g. by heavy current cables, contact wires, transformer stations, radios and television sets, amateur radio stations, microwave devices or similar devices, the conducting cables carrying the measuring signal must be shielded. The sensor cable can be extended to a length of approximately 100m. Use cable of cross section 0.75mm² up to 50m in length and 1.5mm² up to 100m in length.

44 IDEAL SOLAR CONTROLLER - OPENING AND CLOSING THE CONTROLLER

1. The front cover is secured by two holding bars on the top edge of the controller and a screw on the housing.
2. Close the controller by angularly setting the front cover on the controllers housing. The holding bars must be on the corresponding hinge notches.
3. Now, the front cover can be folded down and the push buttons can be threaded through.
4. A fastening screw is used to securely close the housing.

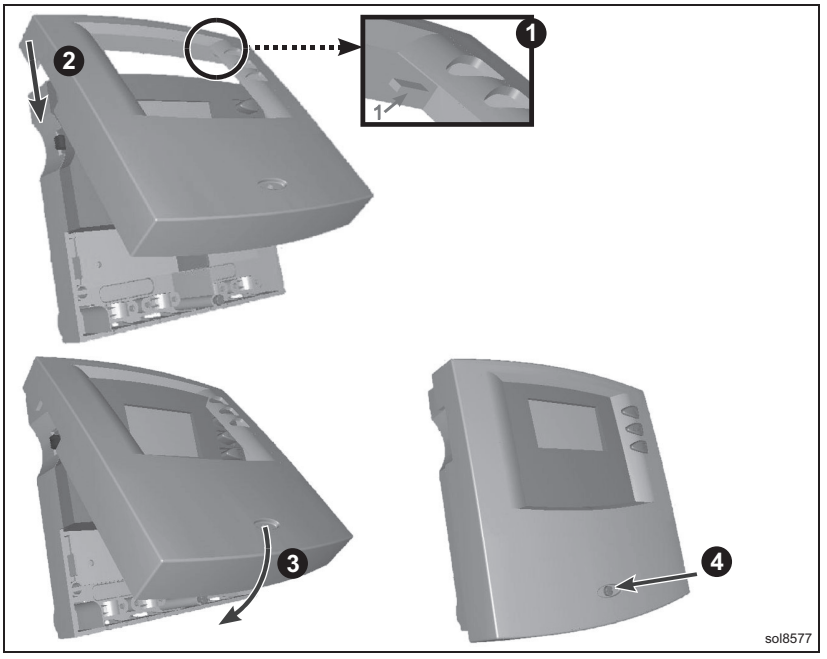

45 IDEAL SOLAR CONTROLLER - COMMISSIONING

1. After the controller's front cover has been closed, the power supply can be turned on (refer to page 5, Electricity Supply)

2. To test if the solar circuit's pump has been installed correctly (independent of the controller's functions), it is helpful to briefly turn it on and off by hand. For this purpose, there is a mode switch on the left side of the housing.

Note.
Every change of the switching position is followed by a 3 sec. lasting display of the current control mode. ('on' / 'Automatic'/ 'off').

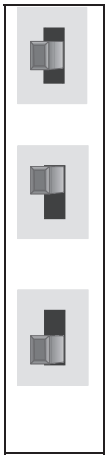

Switch in central position means automatic mode.

The backlight display is yellow.

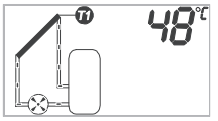

Turn the switch to the upper position to start the pump.
The word 'on' flashes in the display as a reminder.
The backlight display is red.

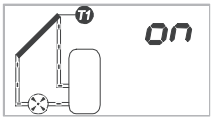

Turn the switch to the lower position to switch off the pump.
The word 'off' flashes in the display as a reminder.
The backlight display is red.

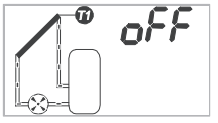

sol8579

WARNING. If the system is ready for operation (system is filled, solar circuit is not blocked), the controller can be set to automatic mode after commissioning.

46 IDEAL SOLAR CONTROLLER - DISPLAY OVERVIEW

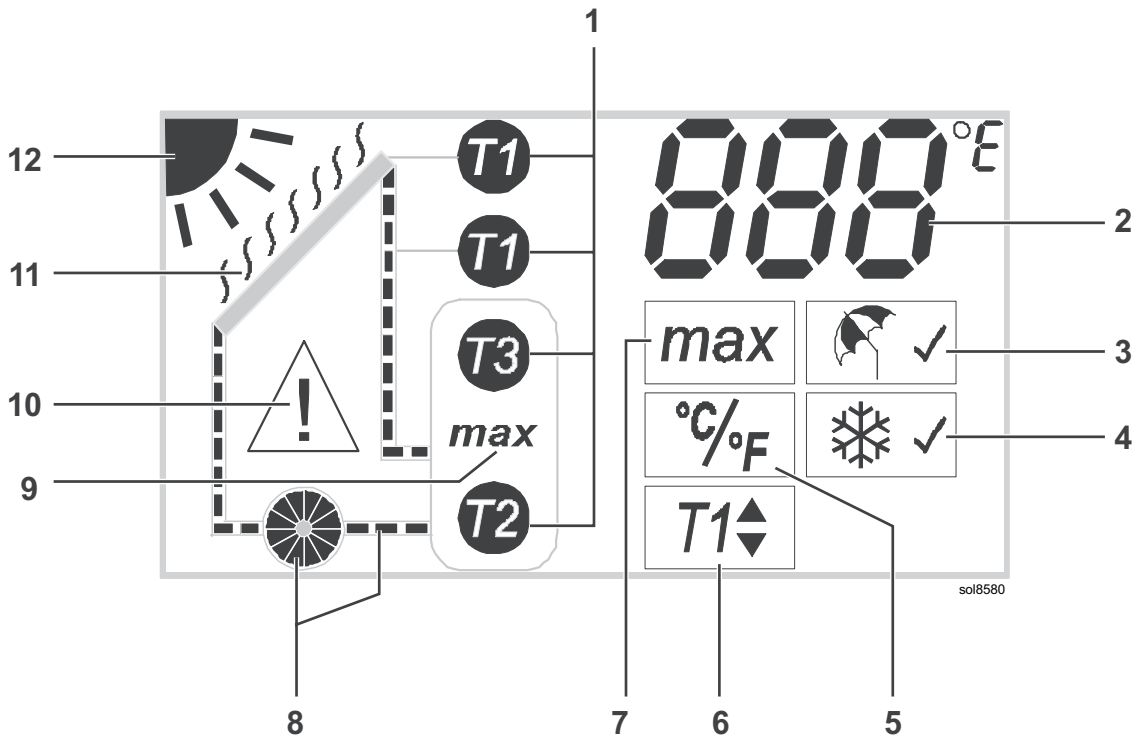

1. Symbols for temperature sensors
2. Display for temperature values and error symbols e.g. short circuit, open circuit or ‘SYS‘ = system error (see Section A)
3. Holiday function (see section B)
4. Antifreeze function (not applicable see section C)
5. Change-over °C / °F (see section D)
6. Pipe collector function (not applicable see section E)
7. Setting of storage tank max. temperature (see section F)
8. Symbols for solar circuit (pump and circulation)
9. Symbol for storage tank max. temperature is reached (see section G)
10. Error icon e.g. short circuit, open circuit (see section A) or ‘SYS‘ = system error (see page 33)
11. Symbol for steam in collector (see section G)
12. Symbol for enough heat provided (see section G)

47 IDEAL SOLAR CONTROLLER - OPERATING THE CONTROLLER

SECTION A

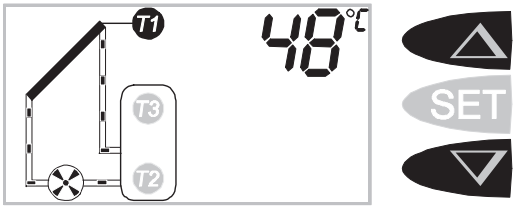

sol8581

During normal operation the ▲▼keys are used to browse through the recorded temperature values. The (T1,T2,T3) sensor symbols in the system diagram, show which measurement value is currently being displayed.

The temperature in the upper part of the storage tank is only displayed if the T3 sensor has been connected.

In the event a sensor or its supply line short circuits, an animated Short Circuit Symbol is displayed instead of the temperature.

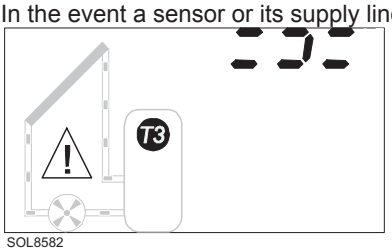

SOL8582

In the event a sensor or its supply line is interrupted, an animated Interruption Symbol is displayed instead of the temperature.

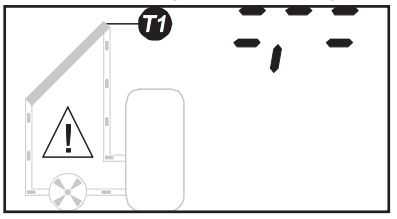

sol8583

If such a sensor fault occurs, the backlight display alternately flashes red/yellow and a warning symbol is displayed to indicate the fault.

SECTION B

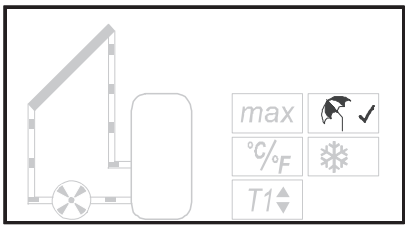

sol8590

The holiday function can be activated with this setting. The holiday function is a storage re-cool function. If the operator does not use the warm water, the storage tank may reach its maximum temperature early in the day. In this case vaporization may occur within the solar unit and thus subjecting the unit to a higher thermal load.

Note: This function should only be used if you are not at home for an extended period of time. Please deactivate this function after returning back home to prevent unnecessary loses of energy!

If while the holiday function is activated, a temperature 10K below the maximum storing temperature is reached, this is recognized by the controller. In order to be able to charge the storage tank the next day for a longer time and thus subjecting the unit to a lower thermal load, the storage tank (e.g. during the night) attempts to cool down to 35°C. For this purpose, if the storage tank is 8K warmer than the collector, the pump is activated. If the temperature difference between the pump and the collector is only 4K, the pump is deactivated again.

To activate the holiday function: Press and hold the set button for 2 seconds. Symbol boxes will appear. Use the ▲and ▼buttons to scroll until the holiday symbol appears. Press and hold the set button until a tick is shown next to the holiday symbol. The holiday function is now set.

Press the 'SET' button again to deactivate the holiday function.

Press the ▼ button to reach the next setting.

continued . . . . .

48 IDEAL SOLAR CONTROLLER - OPERATING THE CONTROLLER continued

SECTION C

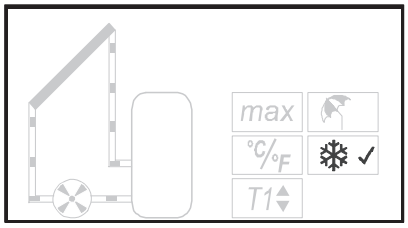

sol8591

The Ideal solar system is supplied with a ready-mixed heat transfer fluid containing glycol and water as its anti-freeze agent.

Note. *The anti-freeze function is only helpful with systems that have solar circuits without anti-freezing agents. This is not applicable to the Ideal Solar System.*

SECTION D

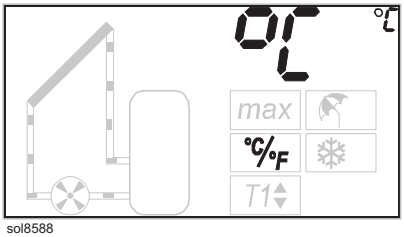

sol8588

Changing the temperature display's unit of measurement.

Press and hold the set button for 2 seconds. Use the ▲and ▼button to scroll to the temperature unit function. Press and hold the set button to change.

Press the ▼ button to reach the next setting.

SECTION E

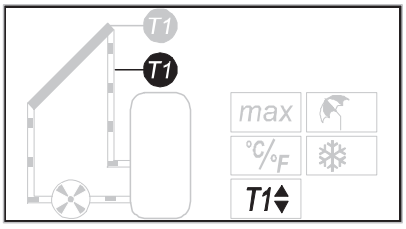

sol8589

The vacuum collector function is only applicable for systems using Evacuated tube collector type systems. This is not applicable with the ideal solar system.

continued . . . . .

49 IDEAL SOLAR CONTROLLER - OPERATING THE CONTROLLER continued

SECTION F

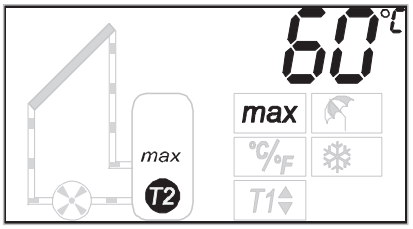

sol8587

Press the 'SET' button for 2 seconds to open the settings menu. At first, the current valid maximum storing temperature value is displayed.

To illustrate which value is referred to, the 'max' indicator in the storage tank symbol and the T2 sensor flash.

To alter the maximum storage temperature: - Press and hold the set button for two seconds using the ▲and ▼buttons, select the maximum storage temperature indicator. (value and T2 Flash) Using the ▲and ▼buttons adjust the value. When the desired value is showing, press and hold the set button for two seconds to save the value.

Press the ▼ button to reach the next setting.

WARNING. It is recommended that the solar store temperature set point is not set below 60°C as this temperature facilitates the eradication of Legionella bacteria.

Risk of scalding from the solar storage tank if set above 60°C

It is recommended that a thermostatic mixing valve (TMV) is set to 60°C or below and is fitted local to the solar cylinder.

SECTION G

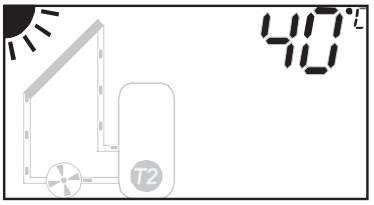

sol8584

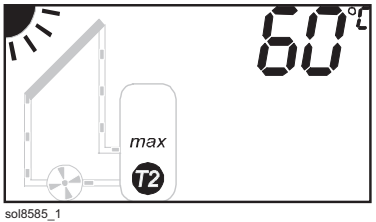

sol8585_1

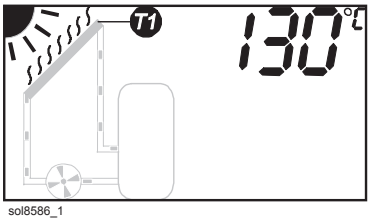

sol8586_1

The controller constantly compares the temperature on the collector (T1) and in the lower part of the storage tank (T2). If while charging the storage tank, a sufficient temperature difference (8K) is recognized, this is indicated by the sun in the display.

If no safety control or functions prohibit the pump operation, an animated pump operation now begins to move in the display. If the temperature difference drops below 4K, the pump operation is deactivated and the sun disappears.

If in the lower part of the storage tank (T2), the set maximum storing temperature is reached (factory setting 60°C), the charging stops. (Pumps are stationary). A new charging procedure is first possible at a temperature of 4K under the maximum storing temperature.

The 'max' indicator flashes in the storage tank symbol to illustrate that although the sun is displayed, the pump is stationary.

If the solar circuit stops (e.g. due to a full tank) at a high irradiance, the solar fluid in the collector can assume a temperature higher than 130°C and vaporize. To protect the pump, the pump operation is blocked until the temperature drops below 127°C (storage tank cools down in the meantime).

THE STEAM INDICATOR FLASHES ON THE COLLECTOR SYMBOL TO ILLUSTRATE THAT THERE IS STEAM IN THE COLLECTOR AND THE PUMP HAS SWITCHED OFF.

50 IDEAL SOLAR CONTROLLER - NOTES ON TROUBLESHOOTING

WARNING. BEFORE OPENING THE FRONT COVER, THE POWER MUST BE DISCONNECTED FROM THE DEVICE.

The controller was designed to be continually used for several years. Nevertheless, faults may occur. Most of the time, the fault's cause is not sought in the controller, rather in the peripheral system elements. The following description of a few common faults should help the installer and the operator to isolate the fault and activate the system as quickly as possible to avoid unnecessary costs. Naturally, not all possible faults can be listed. However, you will find the most common causes of faults that cover the majority of the fault conditions related to the controller.

Controller shows no function.

Secondary Condition:	Possible Cause
The controller's display is blank.	No power supply, check fuse and electric mains.

The solar circuit pump connected on the controller does not run, although its switch-on conditions are met (sun in the display).

Secondary Condition:	Possible Cause
Pump symbol rotates in the display.	Pump's connecting line is not connected, interrupted or fuse in the controller is burnt-out (replacement fuses provided in the housing, see Frame 43). Only use fuses of type 250V 4A MT.
Pump symbol does not rotate; "max" flashes in the storage symbol	No fault, controller deactivated the pump because maximum storing temperature has been reached (Details see Frame 46).
Pump symbol does not rotate; Steam symbol flashes on the collector symbol	No fault, controller has deactivated the pump because the collector maximum temperature (130°C) has been exceeded. (Details see Frame 46)
Pump symbol does not rotate; Backlight display is red; "OFF" blinks in display	Mode switch is on manual operating position 'Pump Off' (Details see Frame 42).
Pump symbol does not rotate; Backlight display flashes red and green alternately; One of the T1/ T2 temperatures displays a sensor fault.	There is a sensor fault (short circuit or interruption); check the sensor supply lines and its correct connection on the controller.

Temperature for Troubleshooting

SYS stands for system error. That means in spite of the pump running there is a difference in temperature of more than 80 Kelvin measured between collector and storage tank. The reason for such a huge temperature difference could be a damaged or faulty connected pump, a closed valve or air in the solar circuit. As air inside the piping cannot be overcome by a conventional pump, circulation of the solar circuit is stopped. Check your solar-system for these sources of error to avoid damages. You can quit the error message afterwards by pressing any key.

Temperature sensor troubleshooting. The temperature recording is performed by thermistor sensors. These sensors are type PT1000. The resistance value changes depending on the temperature. An ohmmeter can be used to check for defective sensors. Un-clamp the corresponding temperature sensor from the controller and then measure the resistance value. The typical resistance values, depending on the temperature, are listed in the following table. Please observe that slight deviations are permitted.

Resistance Values of the PT1000 Temperature Sensor

Temperature [°C]	-30	-20	-10	0	10	20	30	40	50	60	70
Resistance [.]	882	922	961	1000	1039	1078	1117	1155	1194	1232	1271

Temperature [°C]	80	90	100	110	120	130	140	150	160	170	180
Resistance [.]	1309	1347	1385	1423	1461	1498	1536	1573	1611	1648	1685

51 COMMISSIONING OF THE SOLAR PUMP STATION

WARNING. Do not commission the Ideal Solar System in direct sunlight, it is recommended that system is commissioned early morning or evening; failing this the collectors may be covered with a tarpaulin to prevent excessive temperature. The system should not be commissioned when there is a risk of frost.

The Ideal Solar System is supplied with heat transfer fluid and is pre-mixed and ready to use. The heat transfer fluid ensures reliable operation, high vapour reliability and protects against freezing.

IMPORTANT. ONLY IDEAL HEAT TRANSFER FLUID MUST BE USED WITH THE IDEAL SOLAR SYSTEMS.

Safety - Heat Transfer Fluid

- Use undiluted only.
- Keep out of reach of children.
- Avoid contact with skin and eyes.
- If swallowed, seek medical advice immediately and show the label adhered to the container.

The heat transfer fluid is non-corrosive and bio degradable.

Flushing the Solar System Preparations

The Ideal Solar System must be flushed with heat transfer fluid to remove any debris before commissioning.

Use a suitable filling pump, capable of producing 2 bar with filter, such as an electric solar pump, manual hand pump or an attachment to a power tool.

1. connect flushing pipes to the fill and drain valves on the side of the flow limiter by replacing the caps with the hose connectors.
2. Open the fill and drain valves.
3. Using a screwdriver esnure the adjustment screw below the pump is in the veritcal position.
4. Turn the left gauge thermometer dial anti clockwise by 45° to manually open the non return valve.
5. Turn the right gauge thermometer dial anti clockwise by 90° to manually close the non return valve.

The system is now ready to be flushed to remove any debris.

6. Once the solar system has been flushed, open the right gauge thermometer dial by turning clockwise by 90º ensuring the centre point is at the top vertical position.
7. Close the filling and drain valve on the flow limiter and pressurise the solar system until 1.5 - 2.0 bar system pressure is reached.
8. Open the left gauge thermometer dial by turning clockwise by 45°, ensuring the centre point is at the top vertical position.

Ensure that all valves are in the open position on the solar system.

Check all joints for any leaks.

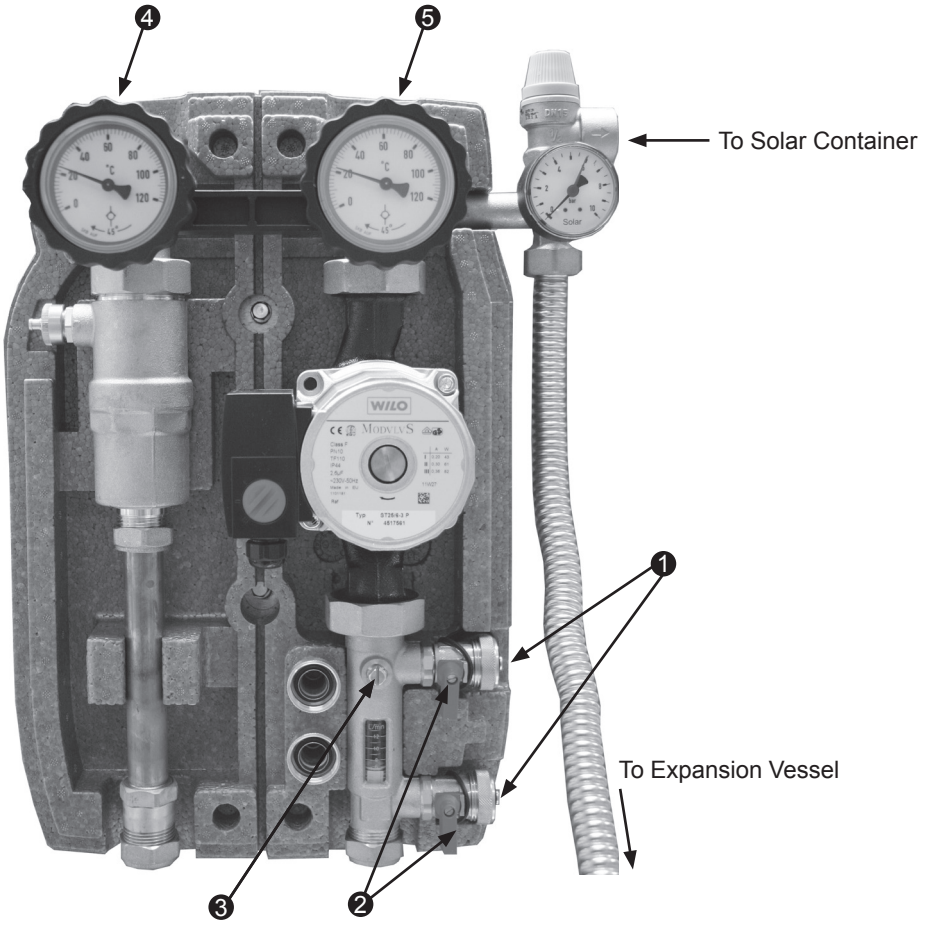

52 COMMISSIONING THE SYSTEM

1. Set the Solar controller to the “ON” position on the slider switch (refer to Frame 45), the solar pump station will now circulate the heat transfer fluid around the system. Circulate until all the air is removed from the system.
2. Once all the air has been removed from the system, turn the solar controller to the “OFF” position (refer to Frame 45) and using the fill and drain valve, slowly drain the heat transfer fluid until the system pressure reduces to 1 bar.

NOTE. DO NOT USE THE SAFETY ASSEMBLY PRESSURE RELIEF VALVE FOR THIS PURPOSE.

3. Turn the solar controller to the “ON” position on the slider switch (refer to Frame 45)
4. Set the flow rate (see table below) using the speed setting on the circulation pump and adjustment screw above the flow measurement display for fine adjustment.
5. Return the solar controller switch to “Auto” (refer to Frame 45).
6. Fit the front thermal insulation shell cover engaging the upper shell first.
7. The system is now commissioned and available for normal operation.

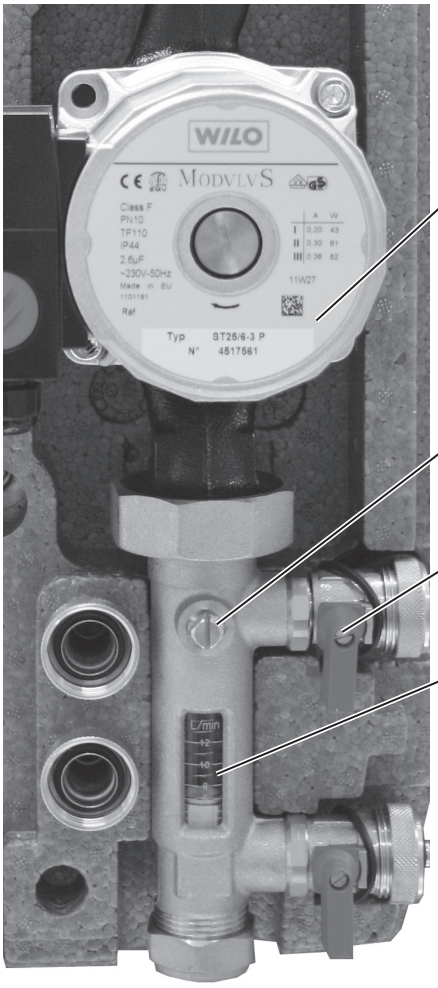

Circulation Pump

Adjustment Screw

Fill and Drain Valve

Flow Measure Display

Corresponding Flow Rates for Ideal Solar Collectors (cold)	
m² of Collectors	l/min
1	1.0
2	2.0
3	3.0
4	4.0
5	5.0
6	6.0
7	7.0
8	8.0
9	9.0

53 HANDING OVER

There is no day-to-day intervention required of the Ideal Solar System. The system is completely automated and requires no maintenance on the part of the end user. However, most customers like to be informed about the solar system and how to maximise it's performance so that they use as little fossil fuel for hot water production as possible.

Therefore, the customer should be shown:

- How to access the temperatures for the solar cylinder and solar collector panel. Some explanation of maximum and minimum readings is recommended.
- How to check system operation during solar radiation, the functioning of the flow meter on the pump station and the symbol on the LCD display of the solar controller.
- (If an un-vented cylinder is fitted). The position of the manual reset thermostat and action to take if this thermostat needs to be reset i.e. a solar competent heating engineer should be called out to check the source of the fault.
- The purposes of the pump station safety relief valve and what action to take if steam or fluid is seen coming from the end of this pipe i.e. a solar competent heating engineer should be called out to check the source of the fault.

UNDER NO CIRCUMSTANCES SHOULD THE CAPTURE CONTAINER BE REMOVED.

- The installation/user manual which should be left with the end user.
- How to manage the boiler cylinder thermostat and time clock so as to maximise the solar gain. Please see next section.

Maximising the output from the Ideal Solar System

If the solar system has been connected to a twin-coil cylinder, both the boiler heating circuit and solar heating circuit can heat the solar cylinder. The lower section of the cylinder is available for the solar circuit, the upper section of the cylinder is available to the boiler circuit.

The solar heating circuit operates most effectively when it has the largest volume of water to heat. Therefore, especially during the summer months, Ideal strongly recommends that the boiler control circuit is left off during the solar day (when the sun is likely to heat the cylinder) so as to provide the solar circuit with as much temperature increase as possible. The cylinder is well insulated and so will retain its heat for a long time unless the water is run off at the points-of-use.

The building occupant's lifestyle will determine the optimum settings for the boiler controls.

The aim is to leave a reasonable volume of water in the boiler section of the cylinder at a temperature which is warm enough to still provide an adequate temperature at the points-of-use and cool enough to obtain as much of the available solar energy as possible. Many occupants find that they can often run on solar only during the summer months.

However, the occupants should be warned about the risk of the formation of legionella if the solar cylinder is not elevated to at least 55°C and preferably 60°C everyday. This facilitates the eradication of the Legionella bacteria.

If the customers find that they have enough water available for washing etc. during the morning and early afternoon period, one ideal setting for example is to switch the boiler section of the cylinder on everyday for an hour between 8 and 9 pm. This setting will make sure the cylinder passes through the 55 to 60 °C once a day and also provide the solar circuit with the maximum workload during the solar day and facilitate stored water for early morning use.

Ultimately the customer should find their own optimum boiler timings for DHW according to their needs.

54 INSTALLATION AND MAINTENANCE CHECKLIST

MAINTENANCE SCHEDULE TO BS 5918: 1989 -

Code of practice for

SOLAR HEATING SYSTEMS FOR DOMESTIC HOT WATER

British Standards Institution (Indirect)

While a properly designed and installed solar heating system should be expected to give a service life comparable to that of other types of heating systems, some maintenance may be necessary to maintain the efficiency of the installation.

During a maintenance inspection the following items should be checked:

COLLECTOR AND ROOF

1. Collectors fitted to manufactures instructions. Glazing clean and free from cracks
2. Roof tiles replaced and secure
3. For flat roof installation: the supporting frame is secure or weighted
4. Automatic air vent is open with cap in place
5. Automatic air vent isolation valve is closed
6. Sensor secure in pocket
7. Water proofing checked
8. Insulation in place and firmly attached
9. Glazing seals are weather tight and sound

SOLAR SYSTEM

1. All joints checked for leaks
2. Glycol in system and correctly pressurised
3. All ancillary components and pipe work adequately supported
4. All covers are in place
5. Manual air vents cleared and closed
6. Drain valves closed and free from leaks
7. Check valve bleed screw closed
8. Pump orientation correct and operating without undue noise or vibration
9. Pump isolation valves fully open
10. Pump and flow meter setting correct
11. Filling loop closed and disconnected
12. Pressure relief valve cleared and free from leaks
13. No isolation valve between collectors and safety valve
14. All non-return valves, solenoids and motorised valves are working correctly
15. No evidence of serious corrosion

ELECTRICS

1. Controller fitted and sited correctly
2. Controller operated in the correct manner
3. Earth bonding in place
4. Correct fuse fitted to solar controller spur
5. Cylinder control and reference sensors secure in pockets
6. All electric cables neatly secured

FINISHING

1. All packaging removed
2. Indoor and outdoor areas clean

Ideal recommend that the above maintenance procedure is followed annually, preferably when the boiler and/or cylinder is also serviced.

The antifreeze has a minimum service life of 5 years and so this fluid must be changed at each 5 year interval.

Before de-commissioning/draining the solar circuit, make sure there is no chance for collector temperature to exceed 100°C, that all check and isolating valves are open and that the heat transfer fluid is captured in storage vessels for safe disposal at a recognised safe disposal centre.

55 FAULT FINDING

NO FLOW SOLAR PRIMARY CIRCUIT

POSSIBLE CAUSES	ACTION
System in “stagnation”	Check **st. limit** at max
Airlock in circuit	Purge air
Manometer on low pressure	Refill and manually operate Differential Temperature Controller (DTC)
Faulty check valve	Check open and if necessary, replace
Steam escaped from AAV	Manual isolate AAV and refill. Check expansion vessel
Fluid exhaust from SRV	Check expansion vessel, SRV and refill
Faulty or blocked pump	Free, clean and if necessary, replace
Frost damage to collector	Replace collector and re-commission circuit
Blocked circuit	Check for degraded old antifreeze blockage or limescale blockage
PT1000 sensors loose	Relocate sensors
Faulty DTC	See below

LOW PERFORMANCE OF SOLAR SYSTEM

POSSIBLE CAUSES	***ACTION***
Faulty DTC/system settings	Check delta T_{on} and delta T_{off} settings, flowrate and pump speed control. Also check functions ON/OFF and DTC on auto.
Faulty PT1000 sensors	Check sensor location and check electrical resistance to temperature (see table in Frame 50).
Faulty pump	Check pump is rotating. Check valves open and pump speed correctly set.
Restriction in circuit	Check circuit components and for old antifreeze/limescale restriction in pipes.
Inadequate air removal	Purge air.
Loss insulation	Re-attach insulation.
Boiler primary circuit providing too much heat	Reset central heating timeclock to give solar system more cylinder water to heat

WATER TOO HOT AT POINTS OF USE

POSSIBLE CAUSES	ACTION
Incorrectly set DTC	Check **st. limit** on DTC
Incorrectly set TMV	Check output temperature from TMV
Faulty boiler primary circuit	Check out boiler primary circuit for faults

FAULTY DTC

POSSIBLE CAUSES	ACTION
No LCD display	No power supply, check fuse and 230 V
LCD says **Short circuit T1/T2**	Check relevant sensor for short circuit
LCD says **Interruption T1/T2**	Check relevant sensor for circuit break

LIST OF PARTS

The following are parts commonly required due to damage or expendability. Their failure or absence is likely to affect safety or performance of this appliance.

When ordering spares please quote:

1. Description.
2. Quantity.
3. Product number.

When replacing any part on this appliance use only spare parts that you can be assured conform to the safety and performance specification that we require. Do not use reconditioned or copy parts that have not been clearly authorised by Ideal.

Key No.	Description	Qty.	Product Number
1	SENSOR	1	174865
2	THERMOMETER HANDLE	1	176719
3	THERMOMETER PIT NUT (Not shown)	1	176720
4	RED RING THERMOMETER	1	176721
5	SUPPLY BALL VALVE	1	176722
6	AIR SEPERATOR BRV	1	176723
7	SHORT COPPER PIPE BRV	1	176724
8	THERMOMETER CONNECTION PIECE	1	176725
9	BLUE RING THERMOMETER	1	176726
10	RETURN BALL VALVE	1	176727
11	1 1/2" NUT & GASKET	1	176728
12	SAFETY GROUP	1	176729
13	SOLAR PRESSURE GAUGE	1	176730
14	WILO PUMP	1	176731
15	FLOW METER 2-12 l	1	176732
16	2 LINE INSULATING BOX	1	176733
17	IDEAL BADGE	1	176734
19	EXPANSION VESSEL BRACKET & CONNECTOR	1	176736
20	FLEXIBLE KIT	1	176737
21	1 LINE INSULATING BOX	1	176738
22	COPPER TEE PIECE KIT	1	176739

LIST OF PARTS

DOUBLE LINE SOLAR STATION

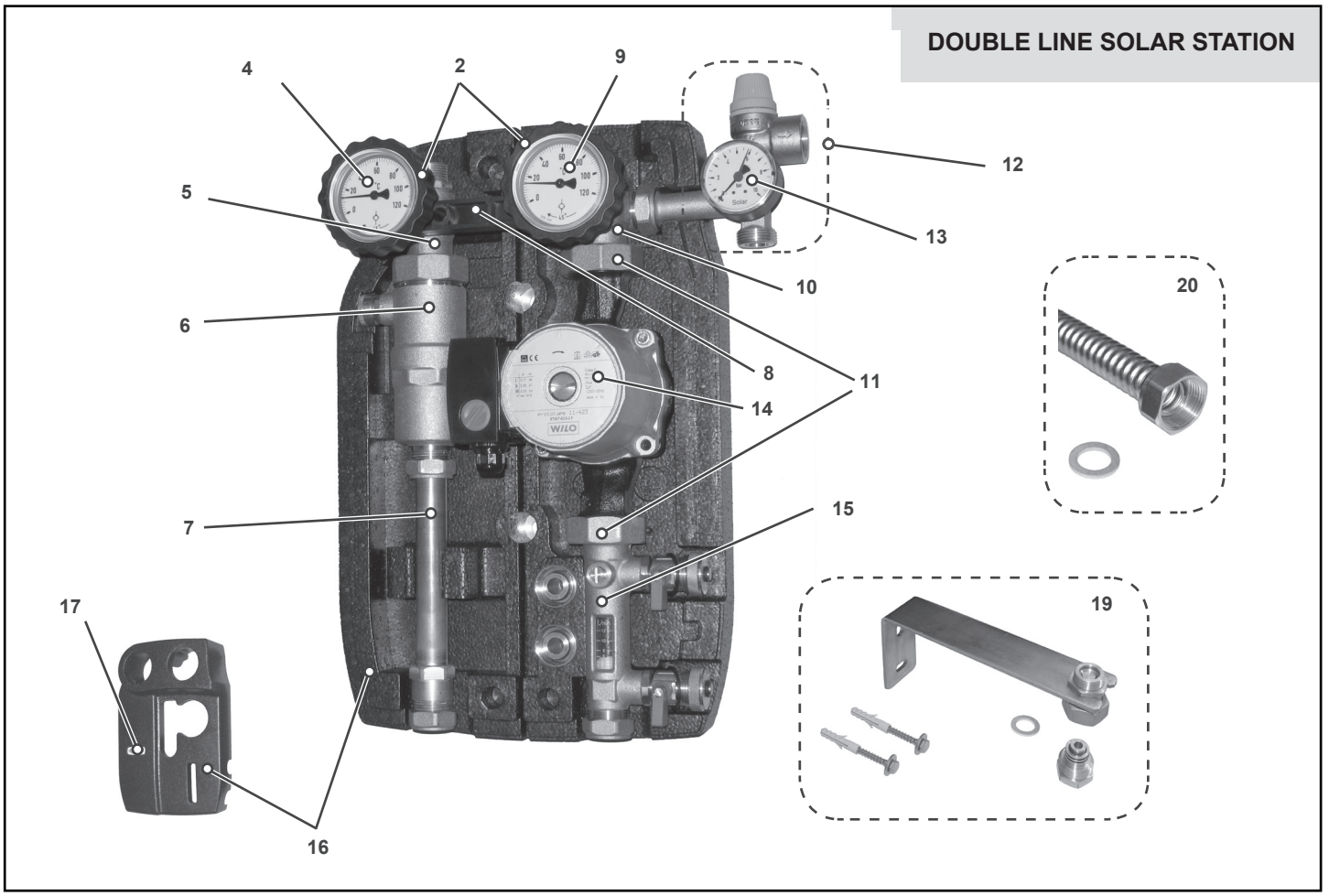

SINGLE LINE SOLAR STATION

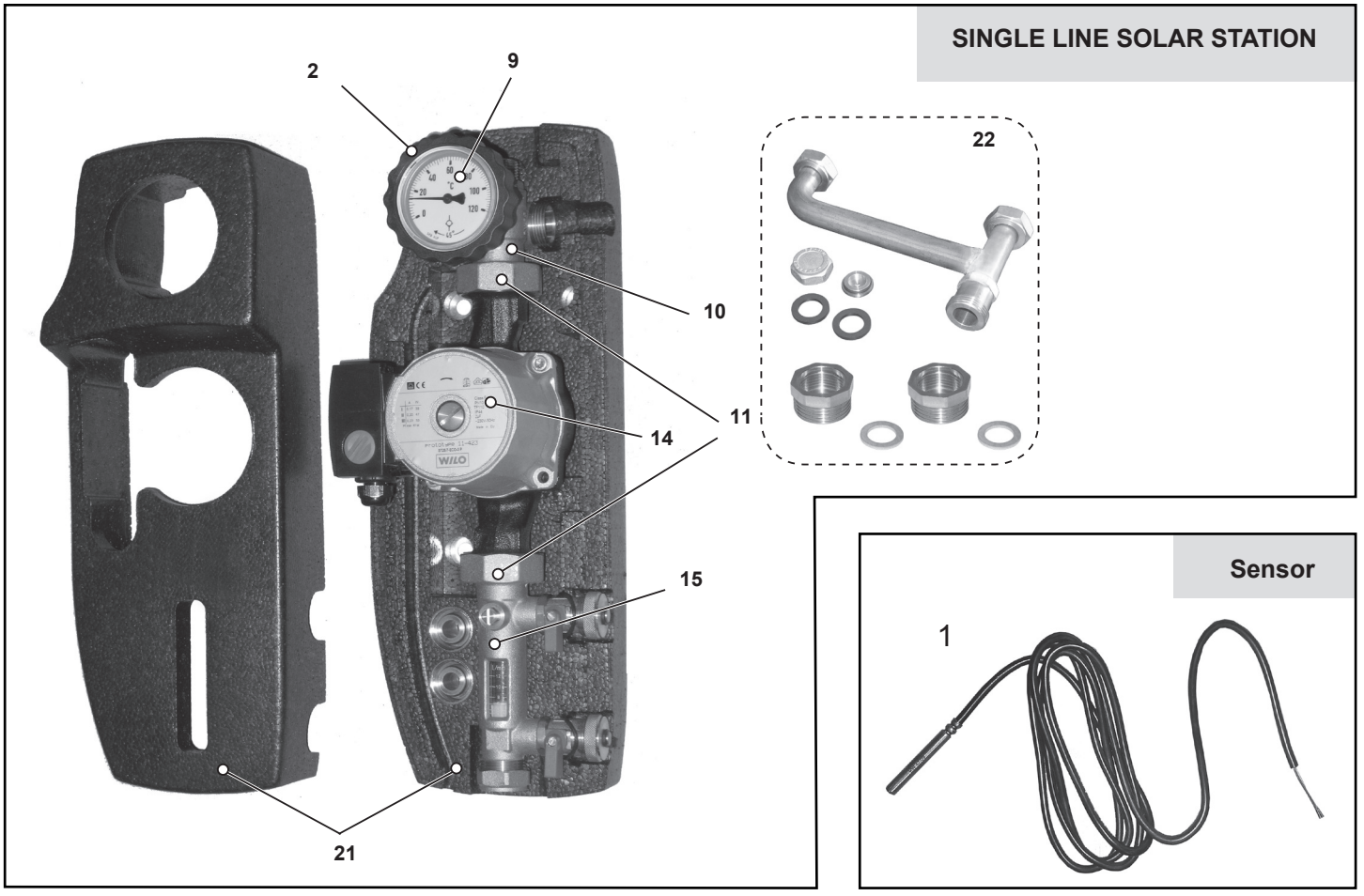

Sensor

NOTES

NOTES

Technical Training

The Ideal Technical Training Centre offers a series of first class training courses for domestic, commercial and industrial heating installers, engineers and system specifiers. For details of courses please ring:..... 01482 498 432

benchmark™

The code of practice for the installation, commissioning & servicing of central heating systems

CERTIFIED PRODUCT
Manufactured under a BS EN ISO 9001: 2000 Quality System accepted by BSI

Ideal Boilers Ltd, P.O. Box 103, National Ave, Kingston upon Hull, HU5 4JN. Telephone: 01482 492 251 Fax: 01482 448 858. Registration No. London 322 137.

Ideal Stelrad Group pursues a policy of continuing improvement in the design and performance of its products. The right is therefore reserved to vary specification without notice.

ideal

Ideal Stelrad Group

Ideal Installer/Solar Technical Helpline: 01482 498 307
www.idealheating.com

USERS GUIDE

SOLAR THERMAL

For installation guide see reverse of book

When replacing any part on this appliance, use only spare parts that you can be assured conform to the safety and performance specification that we require.
Do not use reconditioned or copy parts that have not been clearly authorised by Ideal.

FOR THE OWNER: -

Please read the following notes carefully in order to gain the maximum benefit from your Ideal Solar System.

NOTE: Risk of burns:

The collectors and pipes can become very hot during bright sunlight, please do not touch.

IMPORTANT This appliance is not intended for use by persons (including children) with reduced physical sensory or mental capabilities, or lack of experience and knowledge, unless they have been given supervision or instruction by a person responsible for their safety.

Please ensure children do not play near appliances carrying high voltages.

Maintenance of the Solar System:

It is important that you do not open or close any valves or attempt to remedy any malfunctions to the solar system yourself. Attempting to do so runs the risk of either death or serious injury if the work is carried out improperly

In order to maintain permanent operational readiness, reliability and a long service life, it is essential that regular inspection and maintenance work is undertaken annually by an approved Solar System Specialist.

THE IDEAL SOLAR EC 1 CONTROLLER

The Ideal Solar EC 1 controller basic settings are pre-programmed for optimal performance for most common solar installations.

It is recommended that original parameters are not altered.

Important Note. ***Ensure that the left hand side sliding switch is set in the middle "AUTO" position. When selecting the correct position " Aut " is displayed in the upper right hand LCD display for 5 seconds.***

Your Ideal Solar EC 1 Controller is now fully automated and will operate correctly.

Switch in central position means automatic mode.

The backlight display is yellow.

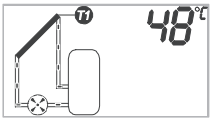

1 USER TEMPERATURE DISPLAY OPERATION

Pressing the △ / ▽ buttons allow you to view the following readings:

- Solar collector temperature T1
- Storage tank lower-zone temperature T2

2 USER SETTABLE PARAMETERS

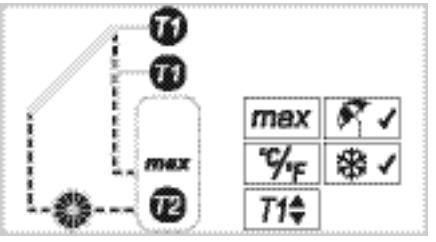

SOLAR STORAGE TANK LIMIT TEMPERATURE

Press and hold the SET button until the LCD display enters its set parameters mode.

NOTE: The control will return to normal operation after 60 seconds if no buttons are pressed.

Selecting the flashing max symbol and hold the SET button for 4 seconds until the max T2 and temperature in the upper right hand will flash, using the △ / ▽ buttons, set the required temperature.

Once the temperature has been set press and hold the SET button for 5 seconds, the max T2 will once again begin to flash.

Press ▽ repeatedly until the controller returns to normal operation mode.

WARNING. It is recommended that the solar store temperature set point is not set below 60°C as this temperature facilitates the eradication of Legionella bacteria.

Risk of scalding from the solar storage tank if set above 60°C

It is recommended that a thermostatic mixer is set to 60°C or below and is fitted local to the solar cylinder.

3 TEMPERATURE DISPLAY UNIT

Enter the parameters mode as described in Frame 1.

Use the arrow buttons / to select the °C/°F symbol.

Press and hold the SET to change the unit.

Once the unit is set press repeatedly until the controller returns to normal operation mode.

4 VACUUM COLLECTOR FUNCTION

IMPORTANT: It is recommended that this parameter not be adjusted from T1 as it is preset for Ideal Solar Collector Panel.

The vacuum collector function is only applicable for systems using Evacuated tube collector type systems. This is not applicable to the ideal solar system.

5 HOLIDAY FUNCTION

This functions should only be applied if the property is vacant for long periods of time.

The Holiday Function is a storage re-cool function. If the user does not use hot water from the solar cylinder over a number of days the storage cylinder may reach its maximum temperature. In this case vaporisation may occur within the Ideal Solar Collector panel which is normal.

When the holiday function is activated the Ideal Solar Controller automatically recognises if an overheat condition will occur and will reduce the cylinder temperature over night by using the solar collectors as a radiator.

Enter the parameters mode as described in Frame 1.

Use the / buttons to select the symbol, press and hold the SET button for 5 seconds until a tick appears in the holiday symbol.

Once the unit is set press repeatedly until the controller returns to normal operation mode.

Repeat in reverse order once the property is occupied.

6 ANTI-FREEZE FUNCTION

IMPORTANT: THIS PARAMETER MUST NOT BE ADJUSTED AS IT IS PRESET FOR IDEAL SOLAR COLLECTOR PANELS AND HEAT TRANSFER FLUID.

Note. ***Ideal Solar Collector Panels must only be used with Ideal Solar Heat Transfer Fluid as this incorporates an anti-freezing agent.***

NOTE: POWER FAILURE

None of the settings are lost if there is a power failure.

TROUBLESHOOTING

If for any reason your Ideal Solar EC 1 Controller does not seem to be operating, check the fault finding chart below before contacting a Solar Qualified Engineer.

WARNING. DO NOT OPEN THE HOUSING

Controller shows no function

Secondary condition:	Possible cause:
The controller's display is blank	No power supply, check fuse and electric mains.

The solar circuit pump connected to the controller does not run, although it's switch on conditions are met (sun in the display)

Secondary condition:	Possible cause:
Pump symbol does not rotate; "max" flashes in the storage symbol Pump symbol does not rotate; Steam symbol flashes on the collector symbol.	No fault, controller deactivated the pump because maximum storing temperature has been reached. No fault, controller has deactivated the pump because the collector maximum temperature (130ºC) has been exceeded.
Pump symbol rotates in the display.	Pump's connecting line is not connected, interrupted or fuse in the controller is burnt-out (replacement fuses provided in the housing). Only use fuses of type 250V 4A MT.*
Pump symbol does not rotate; Backlight display flashes red and green alternately; one of the T1/T2 temperature displays a sensor fault.	There is a sensor fault (short circuit or interruption); check the sensor supply lines and its connect connection on the controller.*

Display showing a flashing "SYS"

SYS stands for **system error**. That means in spite of the pump running there is a difference in temperature of more than 80 Kelvin measured between collector and storage tank. The reason for such a huge temperature difference could be a damaged or faulty connected pump, a closed valve or air in the solar circuit. As air inside the piping can't be overcome by a conventional pump, circulation of the solar circuit is stopped. Check your solar-system for these sources of error to avoid damages.*

You can quit the error message afterwards by pressing any key.

** Contact a Solar qualified engineer.*

If the trouble shooting does not solve the problem then contact your local Solar qualified Engineer.

Ideal Boilers Ltd., P.O. Box 103, National Ave, Kingston Upon Hull, HU5 4JN.
Tel. 01482 492251 Fax. 01482 448858. Registration No. London 322 137.

CE